HYDE 50CM 1 DRAWER WALL MOUNTED UNIT - MATTE WHITE



Product Code: HY050W1.MW.2

PRODUCT INFORMATION

Finish:	Matte White
Height:	400mm
Width:	489mm
Depth:	455mm
Material	MDF, MFC
Weight	16kg
Guarantee	5 years
Configuration	1 Drawer
Drawer Type	Soft close
Compatible Basin(s)	HY050B, HY050B.0TH
Handle(s) Required	1, purchase separately
Other Features	Easy installation Quick release drawers

DESCRIPTION

The HYDE collection features curved short projection washbasins and furniture units, but for those who have the space to spare, there is also the option for much deeper basin & unit combinations.

This 50cm 1 drawer wall mounted unit in matte white provides you with practicality by offering plenty of storage space to keep your bathroom tidy, yet still having a modern and stylish look.

*Basin (HY050B, HY050B.0) and handles to be purchased separately

TECHNICAL DRAWING

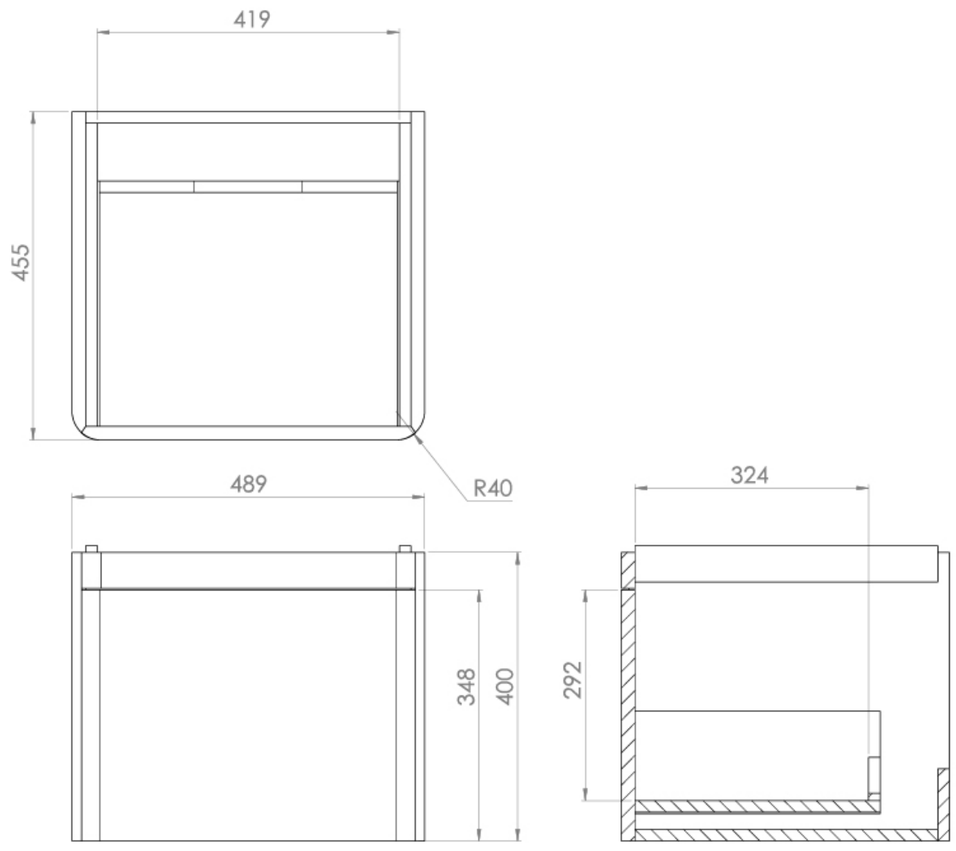

Saneux reserves the right to alter the specifications and product range without prior notice. Dimensions are given as a guide only. Dimensions should not be used for surrounding furniture, fixtures and fittings until the product is on site.

https://saneux.com/products/hyde-50cm-1-drawer-wall-mounted-unit-matte-white-1