AIR 60X35CM WASHBASIN 1TH



Product Code: AIRB60

PRODUCT INFORMATION

Finish:	Gloss White
Height:	160mm
Width:	610mm
Depth:	355mm
Material	Ceramic
Weight	11.6kg
Overflow(s)	Yes
Overflow Position	Centre
Overflow Diameter	23mm
Compatible Overflows	OC01, OC02, OC03
Tap Holes	1 Tap Hole
Tap Hole Position	Centre
Extra Tap Hole Options	2 tap holes
Recommended Waste Required	Slotted waste
Furniture Required For Installation?	Optional
Guarantee	Lifetime

DESCRIPTION

AIR is our space-saving collection of sanitaryware and furniture. Available in 2 colours, 2 short projection sizes and wall-mounted and floor-standing options, there is plenty of choice available to make this range work in any style of bathroom.

This AIR 60cm 1 tap hole washbasin has a depth of only 35cm, making it the perfect basin for smaller bathrooms where saving space is a necessity.

Pair this washbasin with our AIR 60cm wall mounted and floor standing vanity units.

*With an overflow

TECHNICAL DRAWING

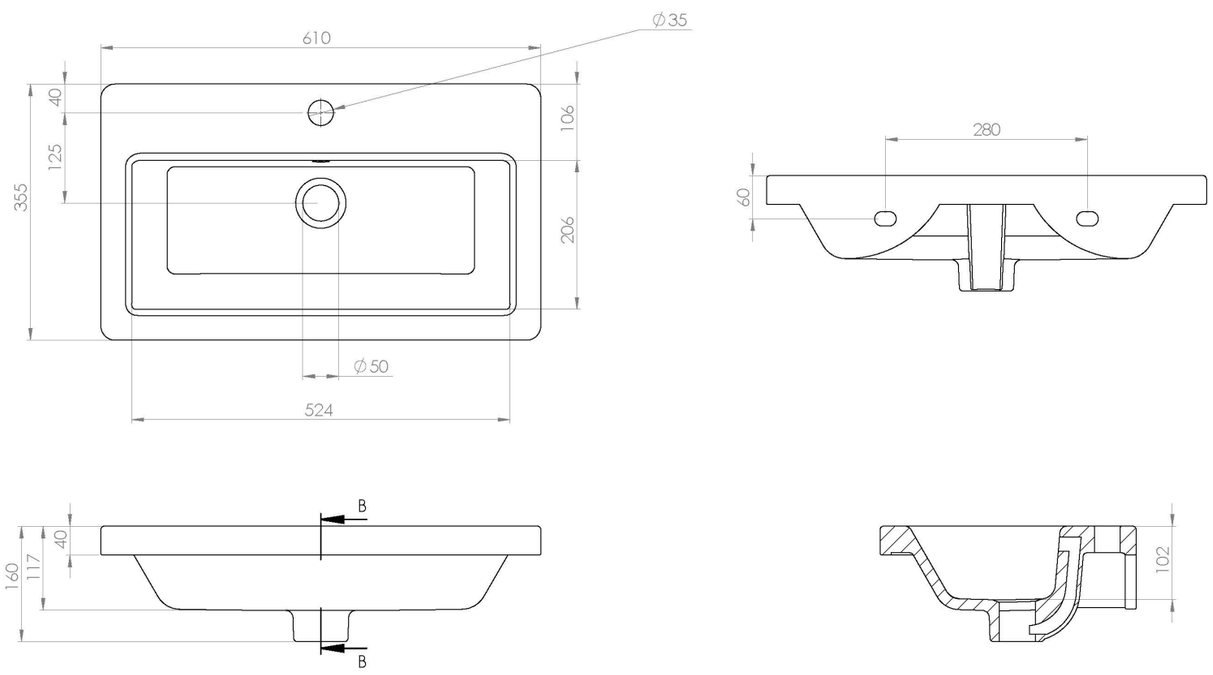

Saneux reserves the right to alter the specifications and product range without prior notice. Dimensions are given as a guide only. Dimensions should not be used for surrounding furniture, fixtures and fittings until the product is on site.

https://saneux.com/products/air-60x35cm-washbasin-1th