AUSTEN 50X39CM WASHBASIN 1TH



Product Code: 50000

PRODUCT INFORMATION

Finish:	Gloss White
Height:	142mm
Width:	500mm
Depth:	390mm
Material	Ceramic
Weight	12.44kg
Overflow(s)	Yes
Overflow Position	Centre
Overflow Diameter	20mm
Compatible Overflows	OC01, OC02, OC03
Tap Holes	1 Tap Hole
Tap Hole Position	Centre
Extra Tap Hole Options	2 tap holes
Recommended Waste Required	Slotted waste
Furniture Required For Installation?	Optional
Guarantee	Lifetime

DESCRIPTION

AUSTEN was designed to provide you with the best quality bathroom products that offer a luxurious yet classic style that will stand the test of time.

This AUSTEN 50x39cm 1 tap hole washbasin has a perfectly rounded deep bowl to prevent splashing as well as plenty of ledge space for displaying toiletries. It is also a modest projection of 39cm, so it can work in a variety of bathrooms both large and small.

Pair this washbasin with our AUSTEN 50cm wall mounted and floor standing vanity units.

*With an overflow

TECHNICAL DRAWING

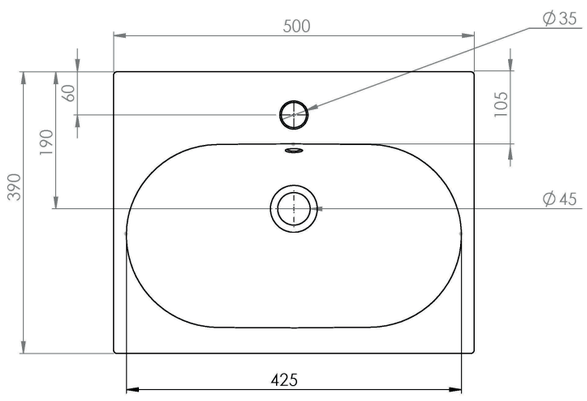

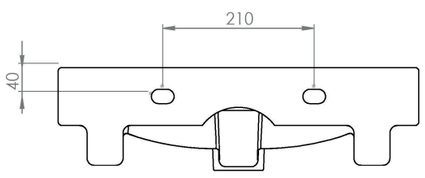

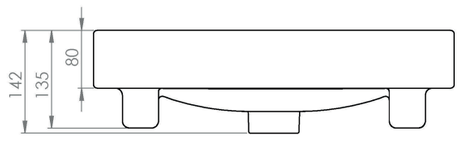

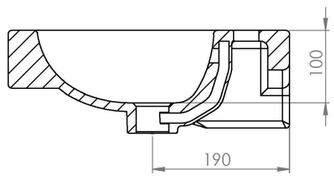

Saneux reserves the right to alter the specifications and product range without prior notice. Dimensions are given as a guide only. Dimensions should not be used for surrounding furniture, fixtures and fittings until the product is on site.

https://saneux.com/products/austen-50x39cm-washbasin-1th