HYDE 50X46CM WASHBASIN 1TH



Product Code: HY050B

PRODUCT INFORMATION

Finish:	Gloss White
Height:	160mm
Width:	500mm
Depth:	460mm
Material	Ceramic
Weight	12.3kg
Overflow(s)	Yes
Overflow Position	Centre
Overflow Diameter	22mm
Compatible Overflows	OC01, OC02, OC03
Tap Holes	1 Tap Hole
Tap Hole Position	Centre
Recommended Waste Required	Slotted waste
Furniture Required For Installation?	Optional
Guarantee	Lifetime

DESCRIPTION

The HYDE collection features curved short projection washbasins and furniture units, but for those who have the space to spare, there is also the option for much deeper basin & unit combinations.

This HYDE 50x46cm 1 tap hole washbasin has a deeper bowl that is great for family bathrooms and communal areas, and pairs with the HYDE 50cm 1 or 2 drawer wall mounted units.

*With an overflow

TECHNICAL DRAWING

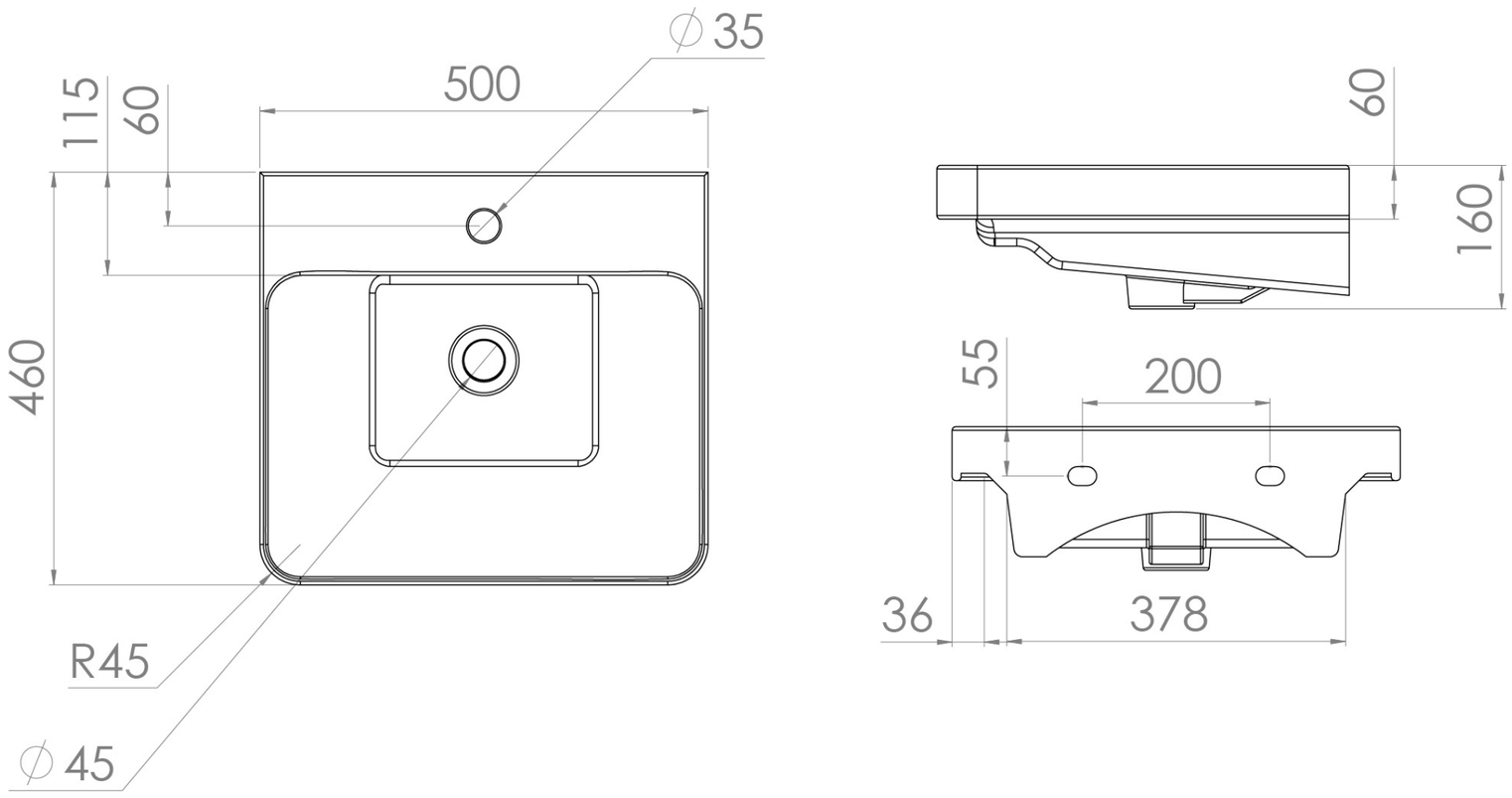

Saneux reserves the right to alter the specifications and product range without prior notice. Dimensions are given as a guide only. Dimensions should not be used for surrounding furniture, fixtures and fittings until the product is on site.

https://saneux.com/products/hyde-50x46cm-washbasin-1th