BALLVALVE DIAPHRAGM WASHER

32mm

Applications

Replacement diaphragm washers are perfect for fixing a leaking toilet cistern inlet float valve. This rubber washer quickly and effectively seals the inlet valve every time after flushing.



Features

~ 32mm [1.1/4"]

~ Thermoplastic Rubber

~ Quick & easy to install

Dimensional Data

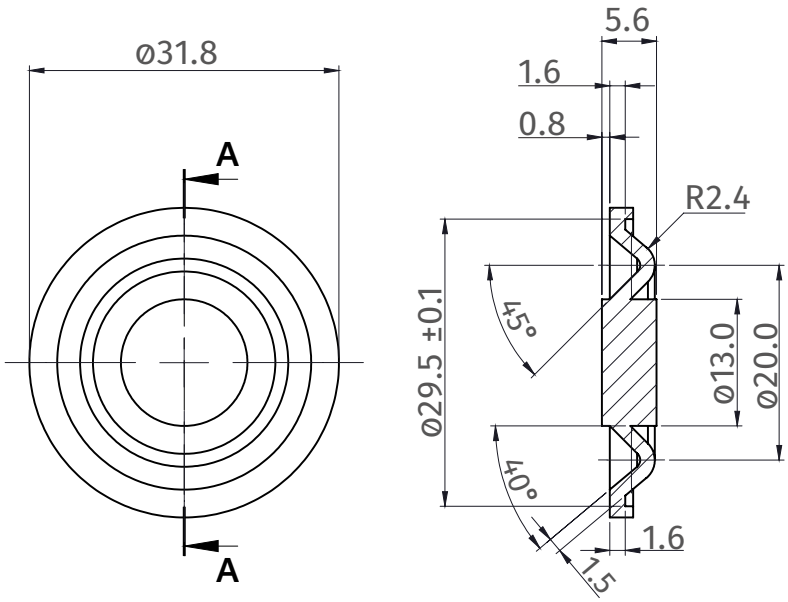

SECTION A-A

Technical Data

Material	Thermoplastic Rubber
Size	1.1/4"
Product Code	368813

THOMAS DUDLEY TD