AIR WALL HUNG WC PAN & SLIM SEAT PACK - RIMLESS - SHORT PROJECTION



Product Code: AIRWH01

PRODUCT INFORMATION

Finish:	Gloss White
Height:	360mm
Width:	360mm
Depth:	482mm
Material	Ceramic
Weight	35kg
Guarantee	Lifetime, 2 years on working parts
Seat Type	Soft close & quick release
Compatible Cistern(s)	FL2024, FL2022, FL2026, FL2028
Type of Flushing	Rimless technology
Other Features	Pan & Seat in one box

DESCRIPTION

The AIR wall hung pan and slim seat short projection Pack is the epitome of modern bathroom design.

It features our Rim_X rimless technology, ensuring impeccable hygiene and effortless cleaning. The rimless design eliminates hidden crevices, making it a breeze to maintain cleanliness.

With a short projection that's perfect for smaller bathrooms where space is limited, and the luxury of a soft-close seat, this toilet is designed to maximize space efficiency without compromising on style. All in one box!

We understand that comfort is paramount, which is why our AIR wall hung pan and slim seat also come in a long projection option for those seeking optimal comfort without sacrificing the sleek aesthetics.

TECHNICAL DRAWING

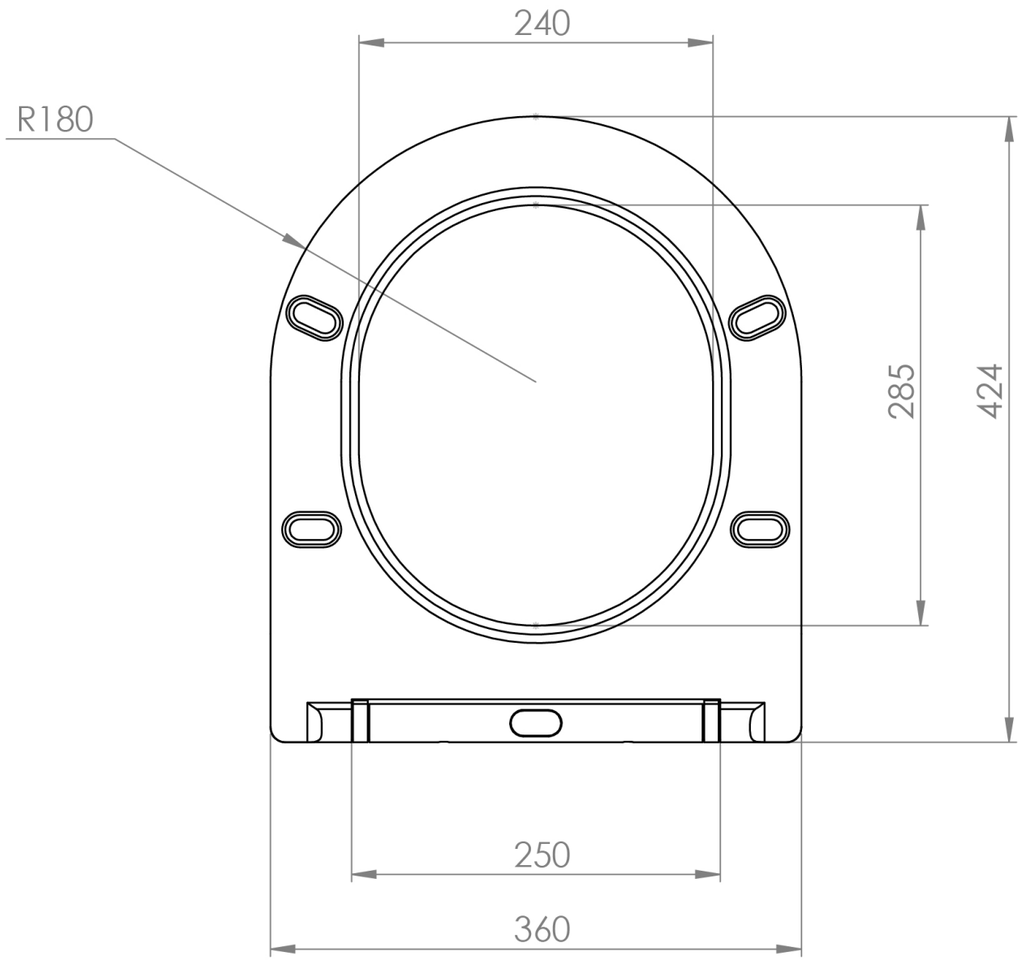

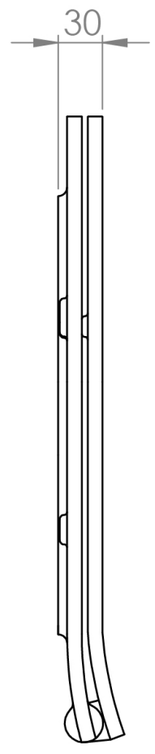

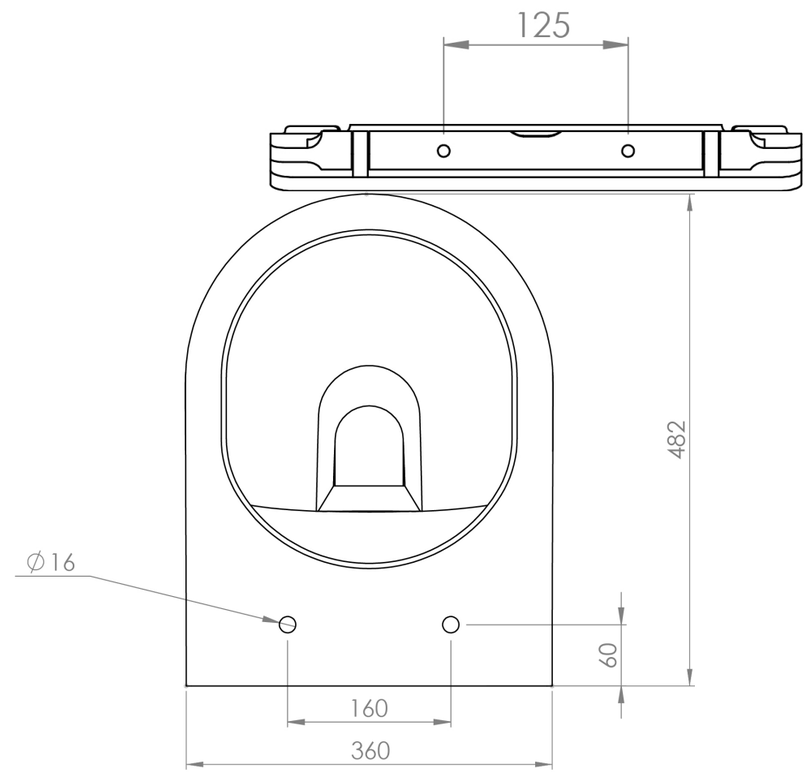

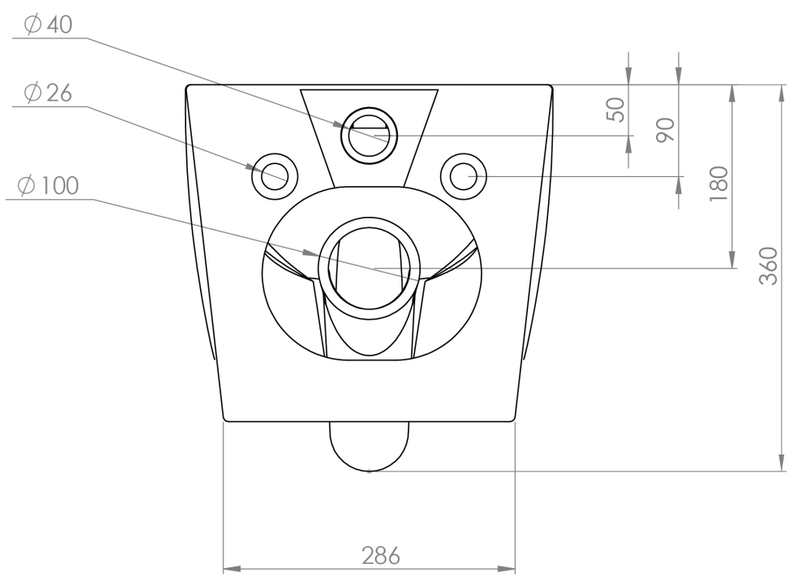

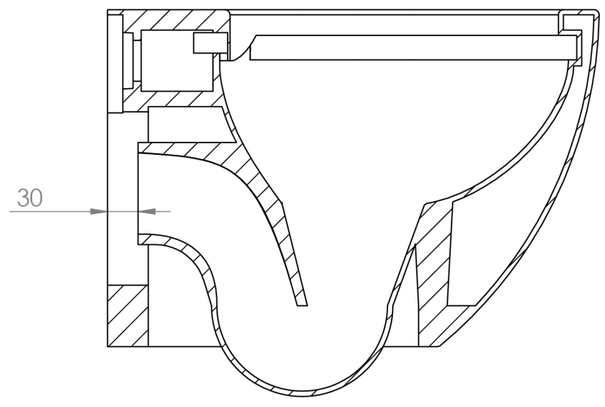

Saneux reserves the right to alter the specifications and product range without prior notice. Dimensions are given as a guide only. Dimensions should not be used for surrounding furniture, fixtures and fittings until the product is on site.

https://saneux.com/products/air-wall-hung-wc-pan-slim-seat-pack-rimless-short-projection