MATTEO 60X42CM WASHBASIN 1TH - GLOSS WHITE



Product Code: 39002

PRODUCT INFORMATION

Finish:	Gloss White
Height:	150mm
Width:	600mm
Depth:	420mm
Material	Ceramic
Weight	18kg
Overflow(s)	Yes
Overflow Position	Centre
Overflow Diameter	21mm
Compatible Overflows	OC01, OC02, OC03
Tap Holes	1 Tap Hole
Tap Hole Position	Centre
Extra Tap Hole Options	2 tap holes
Recommended Waste Required	Slotted waste
Furniture Required For Installation?	Optional
Guarantee	Lifetime
Other Features	Can be paired with the matching MATTEO furniture or MATTEO 60cm towel rail in chrome or matte black

DESCRIPTION

MATTEO offers an unmistakable style with it's square design that is fit for any contemporary bathroom.

This MATTEO 60x42cm 1 tap hole washbasin can be fitted on its own or with a towel rail to create a minimalist & modern bathroom look.

*With an overflow

TECHNICAL DRAWING

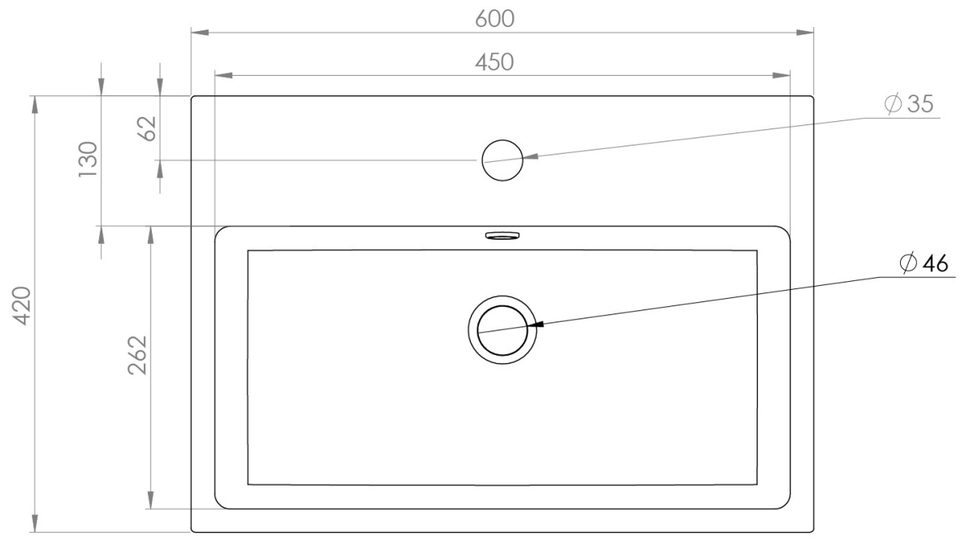

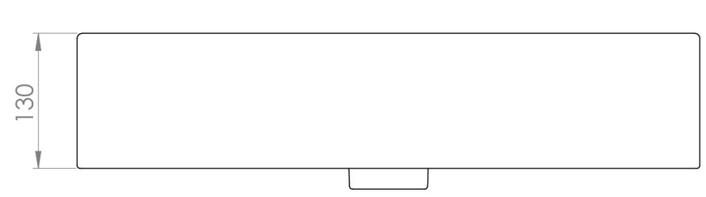

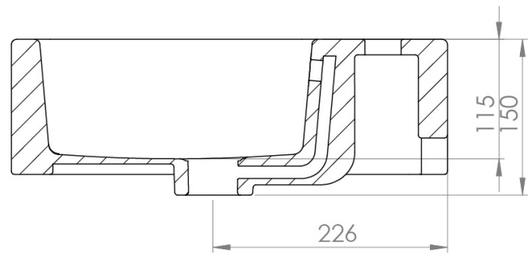

Saneux reserves the right to alter the specifications and product range without prior notice. Dimensions are given as a guide only. Dimensions should not be used for surrounding furniture, fixtures and fittings until the product is on site.

https://saneux.com/products/matteo-60x42cm-washbasin-1th-gloss-white