INTENT THERMOSTATIC SHOWER MIXER & SLIDE RAIL KIT - CHROME





PRODUCT INFORMATION

Finish:	Chrome
Height:	716mm
Width:	263mm
Depth:	101mm
Outlets:	1 Outlet
Weight	4kg

Product Code: NTSP01

DESCRIPTION

If affordable brassware is what you're after, look no further than INTENT.

The INTENT thermostatic shower mixer & slider rail in chrome will complete your showering space in an instant. It comes with a thermostatic 1 way bar valve, round shower handset, shower slider rail, and a shower hose in one pack.

TECHNICAL DRAWING

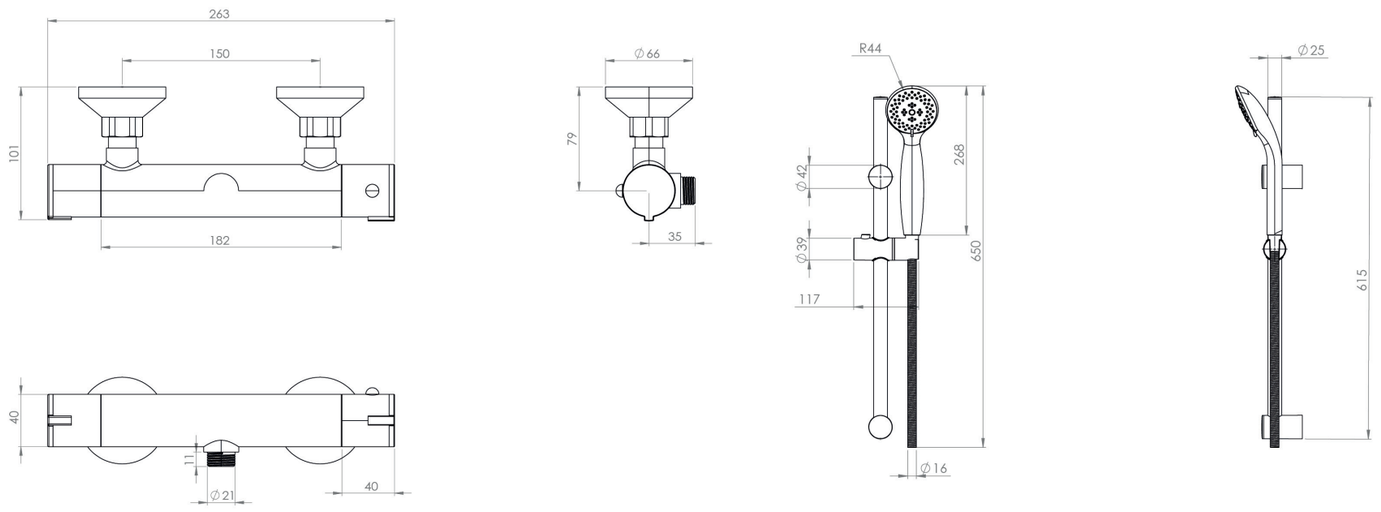

Saneux reserves the right to alter the specifications and product range without prior notice. Dimensions are given as a guide only. Dimensions should not be used for surrounding furniture, fixtures and fittings until the product is on site.

https://saneux.com/products/intent-thermostatic-shower-mixer-slide-rail-kit-chrome