AUSTEN 50CM 1 DRAWER WALL MOUNTED UNIT - MATTE IRON GREY



Product Code: AU050W.IG

PRODUCT INFORMATION

Finish:	Matte Iron Grey
Height:	450mm
Width:	496mm
Depth:	380mm
Material	MFC
Weight	12.42kg
Guarantee	5 years
Configuration	1 Drawer
Drawer Type	Soft close
Compatible Basin(s)	50000, 50000.0TH
Compatible Countertop(s)	AU050T.GW, AU050T.IG, AU050T.MW, AU050T.EO, AU050T.MC, AU050T.C
Handle(s) Required	1, purchase separately
Other Features	Easy installation Quick release drawers

DESCRIPTION

AUSTEN was designed to provide you with the best quality bathroom products that offer a luxury style. The collection offers the complete package with washbasins, vanity units, WC units, side units, mirror cabinets, and toilets so you can create a complete bathroom that will look timeless for years to come.

This 50cm 1 drawer wall mounted unit in the modern matte iron grey finish provides that additional bit of much needed storage space. The floating design will make a bathroom feel bigger with the extra floor space, plus the unit comes with a light grey in-drawer mat, giving the unit a luxurious finish for an affordable price. Pair it with a countertop for a high-end look.

*Basin to be purchased separately
Compatible basins: 50000, 50000.0TH

**Handle to be purchased separately

TECHNICAL DRAWING

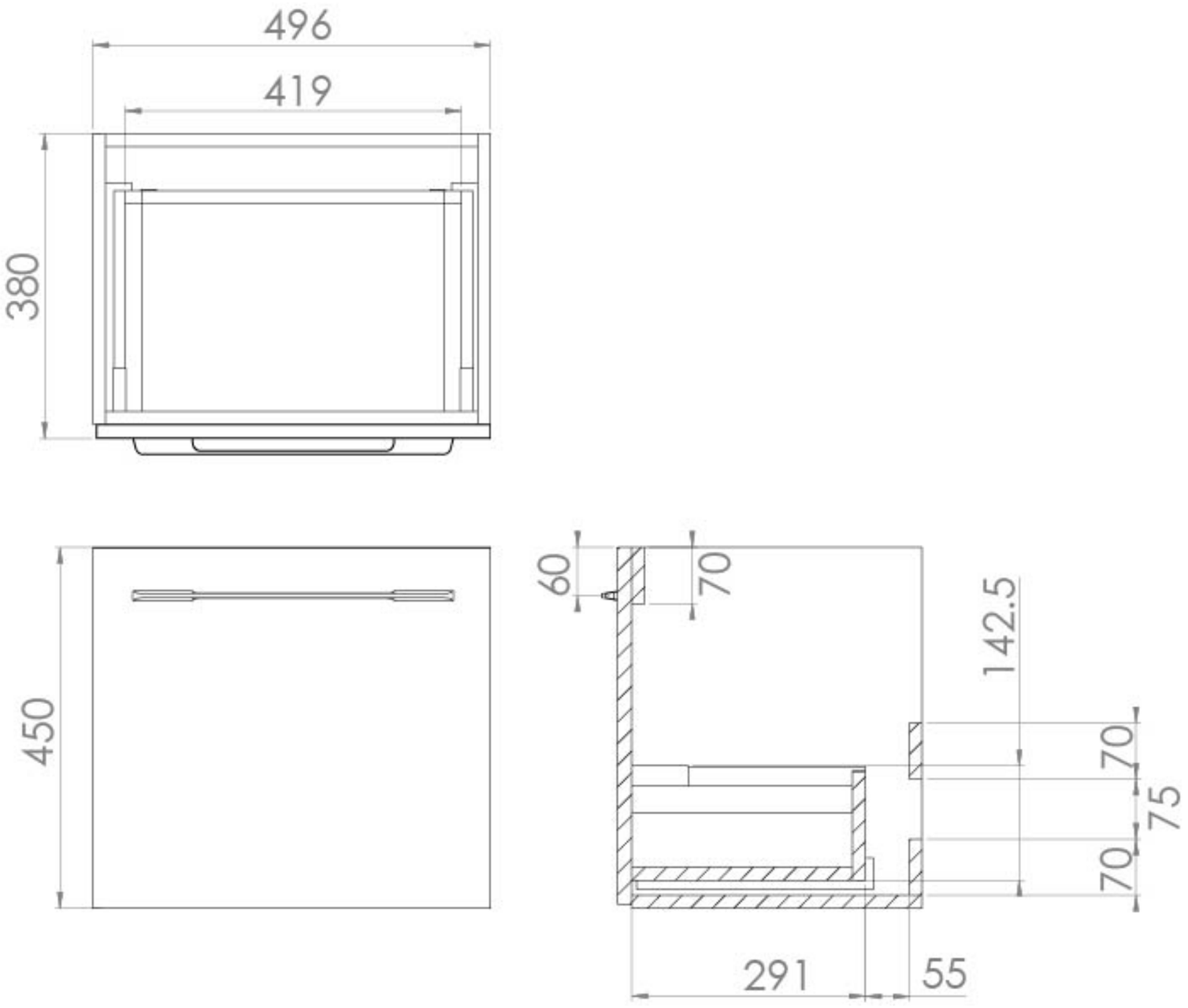

Saneux reserves the right to alter the specifications and product range without prior notice. Dimensions are given as a guide only. Dimensions should not be used for surrounding furniture, fixtures and fittings until the product is on site.

https://saneux.com/products/austen-50cm-1-drawer-wall-mounted-unit-matte-iron-grey