Technical Data Sheet

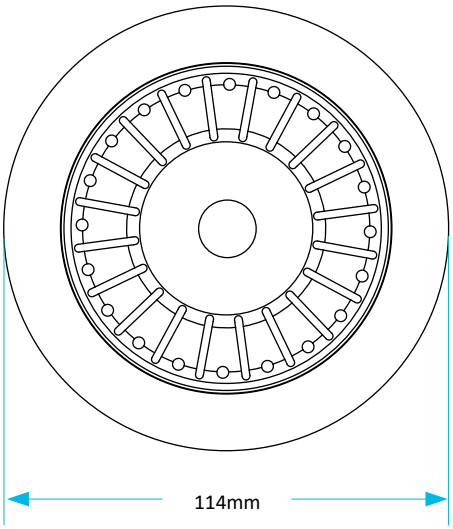

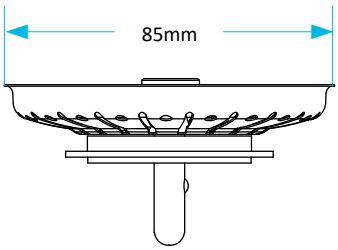

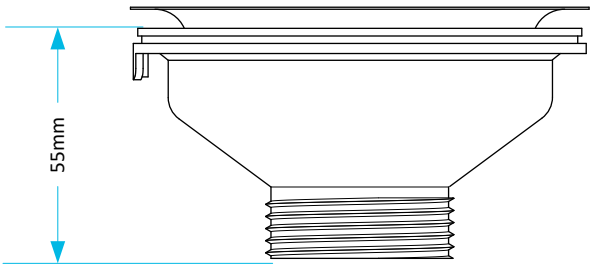

CODE: PP0011	© Viva Sanitary 03/02/2012	
DESCRIPTION: Basket Strainer Waste		
CATAGORY: Wastes	**DRAWN BY:** RH	**VERIFIED BY:** AH