FLUSHE 2.0 1140/85MM UNIVERSAL ULTRA SLIM FRAMED CISTERN WITH FRONT FLUSH



Product Code: FL2026

PRODUCT INFORMATION

Finish:	Grey , Matte Black, Grey
Height:	1140mm
Width:	560mm
Depth:	90mm
Material	Galvanized Steel
Weight	14.25kg
Approvals/Standards	WRAS
Guarantee	2 years
Flushing Volume (L)	6 / 3 litres
Type of Flushing	Mechanical
Compatible Flush Plates	FP110, FP111, FP112, FP120, FP121, FP122, FP150, FP152, FP161, FP162, FP165, FP166, FP165.2, FP166.2

DESCRIPTION

FLUSHE 2.0 is our collection of framed and concealed cisterns, flush plates, and flush buttons. They feature Fluidmaster internals which are WRAS approved, giving you peace of mind that they will not contaminate the water.

This FLUSHE 2.0 1140mm universal ultra slim framed concealed cistern has a front mechanical flush only as it is very slim in design with only a 9cm depth, allowing it to be fitted in smaller bathroom spaces. It is best suited to work with our wall mounted WCs as the frames provide support.

Pair it with our selection of flush plates within the same FLUSHE 2.0 range.

TECHNICAL DRAWING

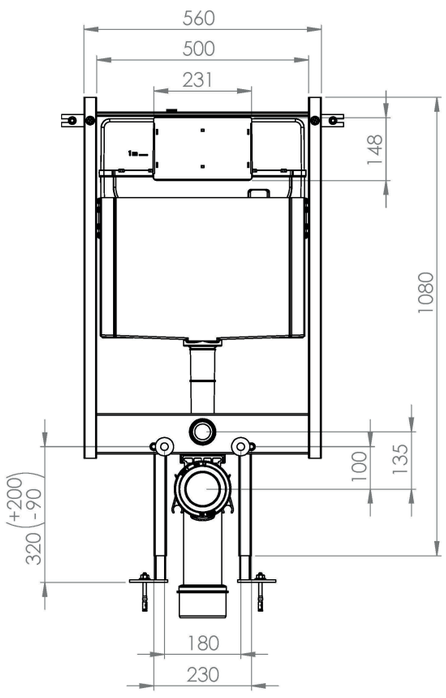

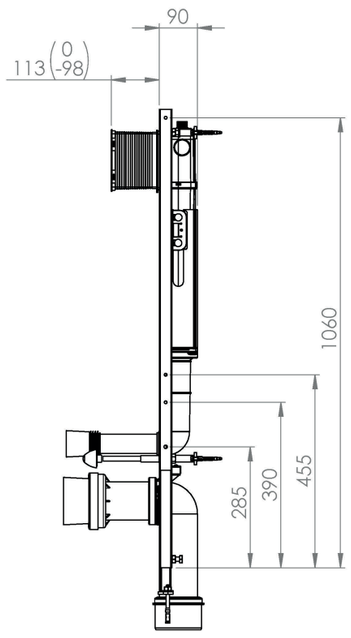

Saneux reserves the right to alter the specifications and product range without prior notice. Dimensions are given as a guide only. Dimensions should not be used for surrounding furniture, fixtures and fittings until the product is on site.

https://saneux.com/products/flushe-20-114085mm-universal-ultra-slim-framed-cistern-with-front-flush