AIR BACK TO WALL WC PAN & SEAT PACK - RIMLESS



Product Code: AIRBTW02

PRODUCT INFORMATION

Finish:	Gloss White
Height:	453mm
Width:	357mm
Depth:	480mm
Material	Ceramic, Plastic
Weight	24.5kg
Guarantee	Lifetime, 2 years on working parts
Seat Type	Soft close & quick release
Compatible Cistern(s)	FL2022, FL2024, FL2026, FL2028, HC2036, HC2037, HC2030
Type of Flushing	Rimless technology
Other Features	Pan & seat in one box

DESCRIPTION

The AIR back to wall rimless pan & seat pack is ultimately modern in both its form and function.

The pan's elegant design will work in a variety of bathroom interiors, whilst the rimless flush adds an even more contemporary look to it and is also simple to clean.

This comes with the slim-line soft closing seat - a modern seat that has a quick release function to remove it from the pan, again making cleaning easy.

Create a tidy bathroom space and opt for a back to wall pan; you can hide the cistern by having it built into the wall or a WC unit as well as save on floor space.

Component parts included:
AIRBTW01 (Pan)
AIR78 (Seat)

For optimal performance, we recommend pairing back to wall rimless pans with a high-level concealed cistern set at 6/3lt flushing.

See our FLUSHE 2.0 range for compatible WRAS approved concealed cisterns.

TECHNICAL DRAWING

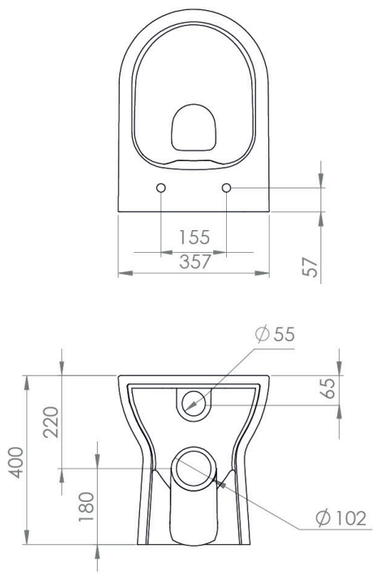

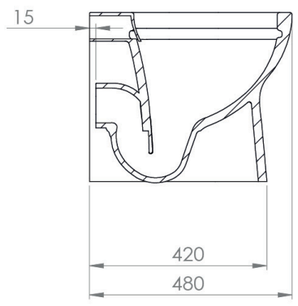

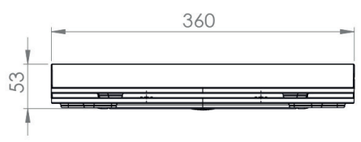

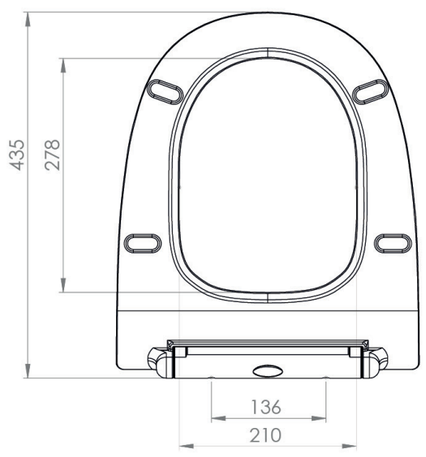

Saneux reserves the right to alter the specifications and product range without prior notice. Dimensions are given as a guide only. Dimensions should not be used for surrounding furniture, fixtures and fittings until the product is on site.