AIR WALL HUNG WC PAN & SLIM SEAT PACK - RIMLESS - LONG PROJECTION



Product Code: AIRWH02

PRODUCT INFORMATION

Finish:	Gloss White
Height:	365mm
Width:	365mm
Depth:	535mm
Material	Ceramic
Weight	38.5kg
Guarantee	Lifetime, 2 years on working parts
Seat Type	Soft close & quick release
Compatible Cistern(s)	FL2024, FL2022, FL2026, FL2028
Type of Flushing	Rimless technology
Other Features	Pan & Seat in one box

DESCRIPTION

The AIR wall hung pan and slim seat long projection pack is the epitome of modern bathroom design.

It features our Rim_X rimless technology, ensuring impeccable hygiene and effortless cleaning. The rimless design eliminates hidden crevices, making it a breeze to maintain cleanliness.

With a long projection for comfort and the luxury of a soft-close seat, the toilet is designed to maximize space efficiency without compromising on style. All in one box!

For those who prioritize space efficiency without compromising luxury, the AIR wall hung pan & seat pack is also available in a short projection option. Experience the same sophistication, cutting-edge technology, and seamless design while saving valuable space in your bathroom.

TECHNICAL DRAWING

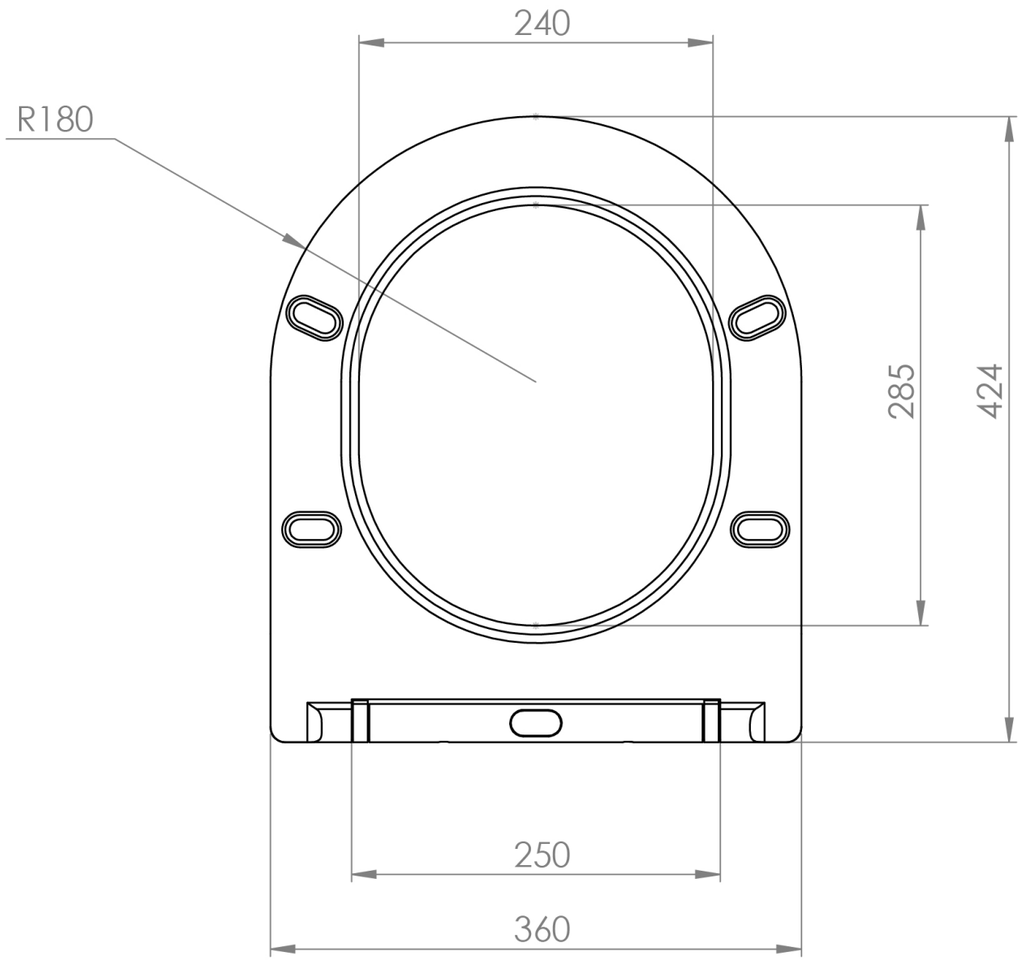

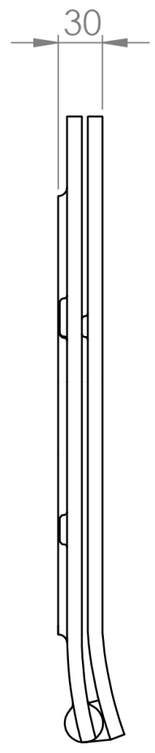

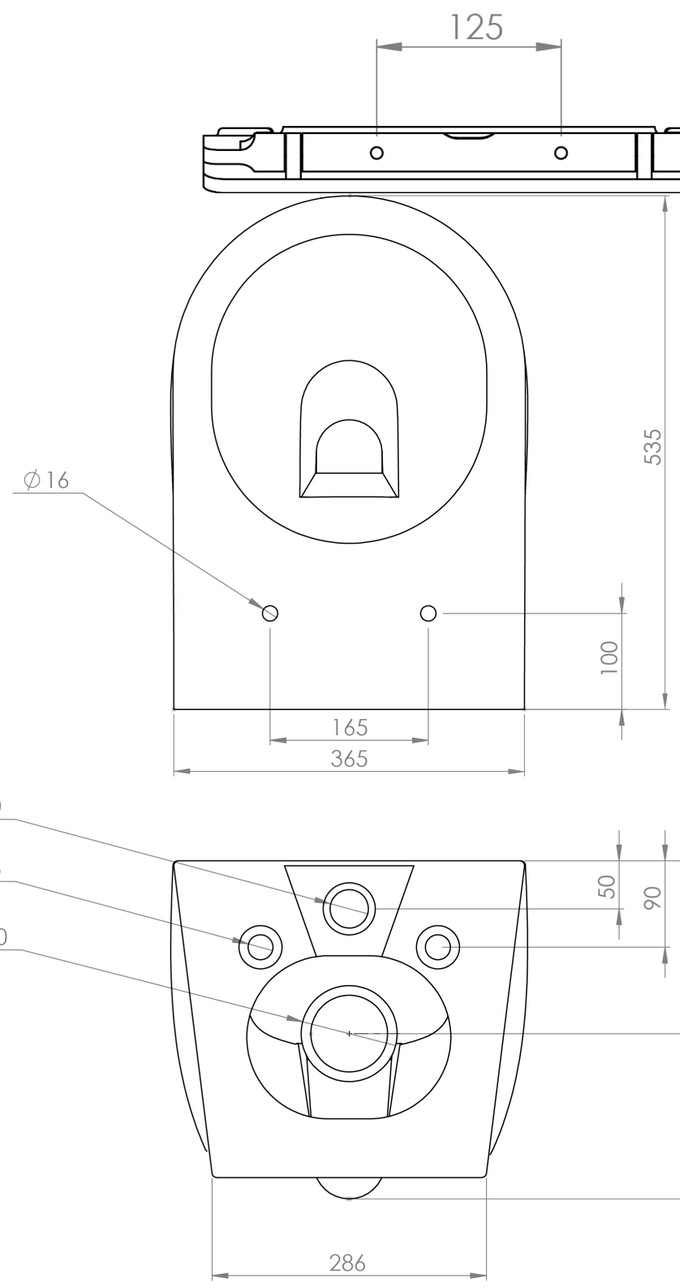

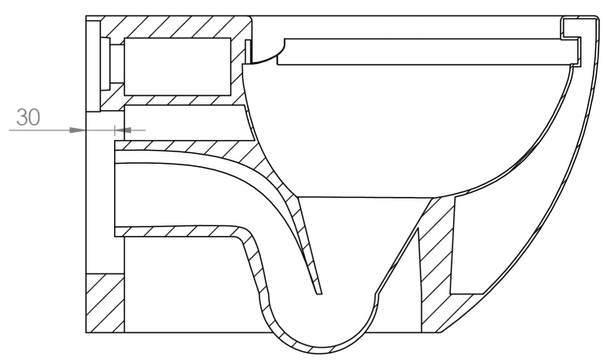

Saneux reserves the right to alter the specifications and product range without prior notice. Dimensions are given as a guide only. Dimensions should not be used for surrounding furniture, fixtures and fittings until the product is on site.

https://saneux.com/products/air-wall-hung-wc-pan-slim-seat-pack-rimless-long-projection