# Britclips® RSWB

*(J 50 175)*

Rapid Sliding Wall Bracket





## Features and benefits

- extendable bracket for faster mounting of electrical boxes, conduit and pipework
- suitable for use in stud walls and floor joists
- can be fixed to wood or metal joists
- quicker and easier to install than traditional methods
- can be set at multiple depths
- combine with starQuick® clamps or RapidRail® Hammerfix for even faster fixing
- Part No. 59491016: shorter version expands from 10 - 16" (25 - 40 cm)
- Part No. 59491624: longer version expands from 16 - 24" (40 - 60 cm)
- material: steel
- pre-galvanized

| Part No. | Model | L | B (mm) | H (mm) | Pack 1 |
|---|---|---|---|---|---|
| 59491016 | 10 - 16" (25 - 40 cm) | 323 mm | 29.2 | 13.7 | 50 |
| 59491624 | 16 - 24" (40 - 60 cm) | 440 mm | 29.2 | 13.7 | 50 |

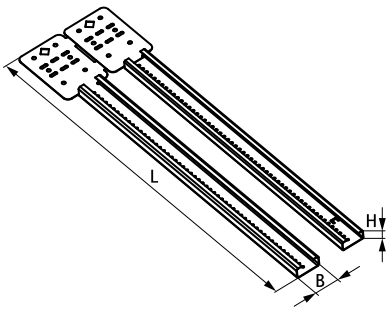


**Complementary**

starQuick® Clamp (Grey)
starQuick® Clamp (White)
starQuick® Clamp (Copper Colour)

**Complementary**

BIS RapidRail® Hammerfix
BIS RapidRail® Slide Nut
starQuick® Universal Rail Adaptor

EN-UK 10/2023- Subject to modifications