Technical data sheet

HJHMI - HEAVY MASONRY HANGER FOR I-JOISTS

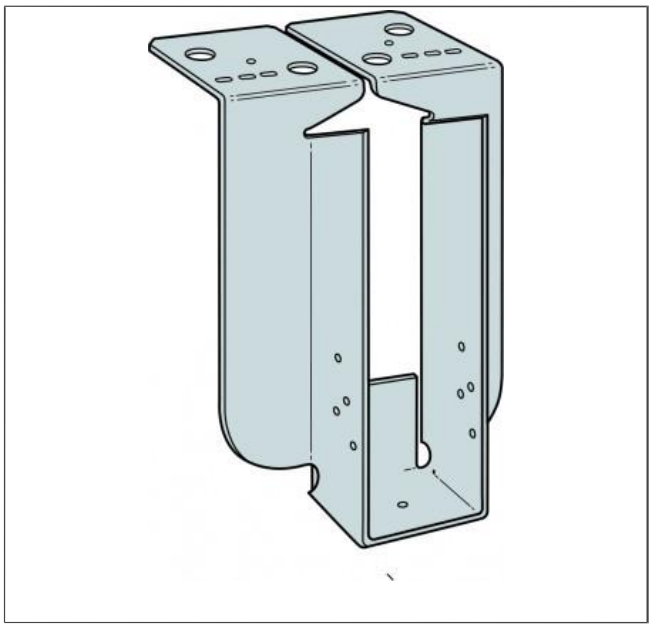

JHMI and HJHMI hangers are for supporting timber joists, beams and trussed rafters from masonry walls.

CE

UK-DoP-h07/0003

FEATURES

Material

Pre-galvanised mild steel.

Benefits

- Built-in inspection slot at the base of the hanger to aid inspection from the ground.
- HJHMI: Heavy duty masonry hanger for higher load carrying capacity.
- Top flange provides widest area in contact with masonry support allowing superior performance.
- Embossments on JHMI stiffen top flange and holes allow improved mortar keying.
- JHMI side flange on deeper hangers is much higher than traditional style, providing greatly enhanced resistance to joist rotation.

TECHNICAL DATA

Safe Working Loads (40-74mm)

References	Hanger Dimensions [mm]		Joist Dimensions [mm]		Joist Fasteners		Safe Working Loads			
							Block Strength [N/mm²]			Short Term Uplift
	Width	Height	Width	Height	Qty	Specification	2.8 - AAC	3.5 - LAC	7.0 - DAC	
HJHMI225/47	47	225	45	220	2	3.75 x 30mm	8.01	8.01	15.00	1.0
HJHMI240/47	47	240	45	240	2	3.75 x 30mm	8.01	8.01	15.00	1.0
HJHMI300/47	47	300	45	300	2	3.75 x 30mm	8.01	8.01	15.00	1.0
HJHMI350/47	47	350	45	350	2	3.75 x 30mm	8.01	8.01	15.00	1.0
HJHMI400/47	47	400	45	400	2	3.75 x 30mm	8.01	8.01	15.00	1.0
HJHMI225/50	50	225	47	220	2	3.75 x 30mm	8.01	8.01	15.00	1.0
HJHMI235/50	50	235	47	235	2	3.75 x 30mm	8.01	8.01	15.00	1.0
HJHMI240/50	50	240	47	240	2	3.75 x 30mm	8.01	8.01	15.00	1.0
HJHMI245/50	50	245	47	245	2	3.75 x 30mm	8.01	8.01	15.00	1.0
HJHMI300/50	50	300	47	300	2	3.75 x 30mm	8.01	8.01	15.00	1.0
HJHMI350/50	50	350	47	350	2	3.75 x 30mm	8.01	8.01	15.00	1.0

Information presented on this document is the exclusive property of Simpson Strong-Tie®
It is valid only when associated with products supplied by Simpson Strong-Tie®

References	Hanger Dimensions [mm]		Joist Dimensions [mm]		Joist Fasteners		Safe Working Loads			
	Width	Height	Width	Height	Qty	Specification	Block Strength [N/mm²]			Short Term Uplift
							2.8 - AAC	3.5 - LAC	7.0 - DAC	
HJHMI400/50	50	400	47	400	2	3.75 x 30mm	8.01	8.01	15.00	1.0
HJHMI195/66	66	195	63	195	2	3.75 x 30mm	8.01	8.01	15.00	1.0
HJHMI225/66	66	225	63	220-225	2	3.75 x 30mm	8.01	8.01	15.00	1.0
HJHMI235/66	66	235	63	235	2	3.75 x 30mm	8.01	8.01	15.00	1.0
HJHMI245/66	66	245	63	245	2	3.75 x 30mm	8.01	8.01	15.00	1.0
HJHMI300/66	66	300	63	300	2	3.75 x 30mm	8.01	8.01	15.00	1.0
HJHMI350/66	66	350	63	350	2	3.75 x 30mm	8.01	8.01	15.00	1.0
HJHMI400/66	66	400	63	400	2	3.75 x 30mm	8.01	8.01	15.00	1.0
HJHMI200/72	72	200	70	200	2	3.75 x 30mm	8.01	8.01	15.00	1.0
HJHMI225/72	72	225	70	220	2	3.75 x 30mm	8.01	8.01	15.00	1.0
HJHMI240/72	72	240	70	240	2	3.75 x 30mm	8.01	8.01	15.00	1.0
HJHMI300/72	72	300	70	300	2	3.75 x 30mm	8.01	8.01	15.00	1.0
HJHMI350/72	72	350	70	350	2	3.75 x 30mm	8.01	8.01	15.00	1.0
HJHMI400/72	72	400	70	400	2	3.75 x 30mm	8.01	8.01	15.00	1.0

Safe Working Loads (75-200mm)

References	Hanger Dimensions [mm]		Joist Dimensions [mm]		Joist Fasteners		Safe Working Loads			
	Width	Height	Width	Height	Qty	Specification	Block Strength [N/mm²]			Short Term Uplift
							2.8 - AAC	3.5 - LAC	7.0 - DAC	
HJHMI195/75	75	195	72	195	2	3.75 x 30mm	7.99	14.84	15.00	1.0
HJHMI225/75	75	225	72	220	2	3.75 x 30mm	7.99	14.84	15.00	1.0
HJHMI235/75	75	235	72	235	2	3.75 x 30mm	7.99	14.84	15.00	1.0
HJHMI245/75	75	245	72	245	2	3.75 x 30mm	7.99	14.84	15.00	1.0
HJHMI300/75	75	300	72	300	2	3.75 x 30mm	7.99	14.84	15.00	1.0
HJHMI195/78	78	195	2 Ply 38	195	2	3.75 x 30mm	7.99	14.84	15.00	1.0
HJHMI225/78	78	225	3 Ply 38	220	2	3.75 x 30mm	7.99	14.84	15.00	1.0
HJHMI235/78	78	235	4 Ply 38	235	2	3.75 x 30mm	7.99	14.84	15.00	1.0
HJHMI240/78	78	240	5 Ply 38	240	2	3.75 x 30mm	7.99	14.84	15.00	1.0
HJHMI245/78	78	245	6 Ply 38	245	2	3.75 x 30mm	7.99	14.84	15.00	1.0
HJHMI300/78	78	300	7 Ply 38	300	2	3.75 x 30mm	7.99	14.84	15.00	1.0
HJHMI400/78	78	400	8 Ply 38	400	2	3.75 x 30mm	7.99	14.84	15.00	1.0

Information presented on this document is the exclusive property of Simpson Strong-Tie®
It is valid only when associated with products supplied by Simpson Strong-Tie®

HJHMI - HEAVY MASONRY HANGER FOR I-JOISTS

SIMPSON Strong-Tie

References	Hanger Dimensions [mm]		Joist Dimensions [mm]		Joist Fasteners		Safe Working Loads			
							Block Strength [N/mm²]			Short Term Uplift
	Width	Height	Width	Height	Qty	Specification	2.8 - AAC	3.5 - LAC	7.0 - DAC	
HJHMI145/91	91	145	2 Ply 45 or 89-90	145	2	3.75 x 30mm	7.99	14.84	15.00	1.0
HJHMI184/91	91	184	2 Ply 45 or 89-90	184	2	3.75 x 30mm	7.99	14.84	15.00	1.0
HJHMI195/91	91	195	2 Ply 45 or 89-90	195	2	3.75 x 30mm	7.99	14.84	15.00	1.0
HJHMI200/91	91	200	2 Ply 45 or 89-90	200	2	3.75 x 30mm	7.99	14.84	15.00	1.0
HJHMI225/91	91	225	2 Ply 45 or 89-90	220	2	3.75 x 30mm	7.99	14.84	15.00	1.0
HJHMI235/91	91	235	2 Ply 45 or 89-90	235	2	3.75 x 30mm	7.99	14.84	15.00	1.0
HJHMI240/91	91	240	2 Ply 45 or 89-90	240	2	3.75 x 30mm	7.99	14.84	15.00	1.0
HJHMI245/91	91	245	2 Ply 45 or 89-90	245	2	3.75 x 30mm	7.99	14.84	15.00	1.0
HJHMI300/91	91	300	2 Ply 45 or 89-90	300	2	3.75 x 30mm	7.99	14.84	15.00	1.0
HJHMI350/91	91	350	2 Ply 45 or 89-90	350	2	3.75 x 30mm	7.99	14.84	15.00	1.0
HJHMI400/91	91	400	2 Ply 45 or 89-90	400	2	3.75 x 30mm	7.99	14.84	15.00	1.0
HJHMI195/96	96	195	2 ply 47	195	2	3.75 x 30mm	7.99	14.84	15.00	1.0
HJHMI225/96	96	225	2 ply 47	220	2	3.75 x 30mm	7.99	14.84	15.00	1.0
HJHMI235/96	96	235	2 ply 47	235	2	3.75 x 30mm	7.99	14.84	15.00	1.0
HJHMI240/96	96	240	2 ply 47	240	2	3.75 x 30mm	7.99	14.84	15.00	1.0
HJHMI245/96	96	245	2 ply 47	245	2	3.75 x 30mm	7.99	14.84	15.00	1.0
HJHMI300/96	96	300	2 ply 47	300	2	3.75 x 30mm	7.99	14.84	15.00	1.0
HJHMI350/96	96	350	2 ply 47	350	2	3.75 x 30mm	7.99	14.84	15.00	1.0
HJHMI400/96	96	400	2 ply 47	400	2	3.75 x 30mm	7.99	14.84	15.00	1.0
HJHMI195/100	100	195	97	195	2	3.75 x 30mm	7.99	14.84	15.00	1.0
HJHMI225/100	100	225	97	220	2	3.75 x 30mm	7.99	14.84	15.00	1.0
HJHMI245/100	100	245	97	245	2	3.75 x 30mm	7.99	14.84	15.00	1.0
HJHMI300/100	100	300	97	300	2	3.75 x 30mm	7.99	14.84	15.00	1.0
HJHMI350/100	100	350	97	350	2	3.75 x 30mm	7.99	14.84	15.00	1.0
HJHMI400/100	100	400	97	400	2	3.75 x 30mm	7.99	14.84	15.00	1.0
HJHMI450/100	100	450	97	450	2	3.75 x 30mm	7.99	14.84	15.00	1.0
HJHMI240/102	102	240	2 Ply 51	240	2	3.75 x 30mm	7.99	14.84	15.00	1.0
HJHMI300/102	102	300	2 Ply 51	300	2	3.75 x 30mm	7.99	14.84	15.00	1.0
HJHMI350/102	102	350	2 Ply 51	350	2	3.75 x 30mm	7.99	14.84	15.00	1.0
HJHMI400/102	102	400	2 Ply 51	400	2	3.75 x 30mm	7.99	14.84	15.00	1.0

Information presented on this document is the exclusive property of Simpson Strong-Tie®
It is valid only when associated with products supplied by Simpson Strong-Tie®

HJHMI - HEAVY MASONRY HANGER FOR I-JOISTS

References	Hanger Dimensions [mm]		Joist Dimensions [mm]		Joist Fasteners		Safe Working Loads			
							Block Strength [N/mm²]			Short Term Uplift
	Width	Height	Width	Height	Qty	Specification	2.8 - AAC	3.5 - LAC	7.0 - DAC	
HJHMI195/120	120	195	2 Ply 58 or 2 Ply 60	195	2	3.75 x 30mm	7.99	14.84	15.00	1.0
HJHMI200/120	120	200	2 Ply 58 or 2 Ply 60	200	2	3.75 x 30mm	7.99	14.84	15.00	1.0
HJHMI225/120	120	225	2 Ply 58 or 2 Ply 60	220	2	3.75 x 30mm	7.99	14.84	15.00	1.0
HJHMI235/120	120	235	2 Ply 58 or 2 Ply 60	235	2	3.75 x 30mm	7.99	14.84	15.00	1.0
HJHMI240/120	120	240	2 Ply 58 or 2 Ply 60	240	2	3.75 x 30mm	7.99	14.84	15.00	1.0
HJHMI245/120	120	245	2 Ply 58 or 2 Ply 60	245	2	3.75 x 30mm	7.99	14.84	15.00	1.0
HJHMI300/120	120	300	2 Ply 58 or 2 Ply 60	300	2	3.75 x 30mm	7.99	14.84	15.00	1.0
HJHMI350/120	120	350	2 Ply 58 or 2 Ply 60	350	2	3.75 x 30mm	7.99	14.84	15.00	1.0
HJHMI400/120	120	400	2 Ply 58 or 2 Ply 60	400	2	3.75 x 30mm	7.99	14.84	15.00	1.0
HJHMI195/129	129	195	2 Ply 63	195	2	3.75 x 30mm	7.99	14.84	15.00	1.0
HJHMI225/129	129	225	2 Ply 63	220-225	2	3.75 x 30mm	7.99	14.84	15.00	1.0
HJHMI235/129	129	235	2 Ply 63	235	2	3.75 x 30mm	7.99	14.84	15.00	1.0
HJHMI240/129	129	240	2 Ply 63	240	2	3.75 x 30mm	7.99	14.84	15.00	1.0
HJHMI245/129	129	245	2 Ply 63	245	2	3.75 x 30mm	7.99	14.84	15.00	1.0
HJHMI300/129	129	300	2 Ply 63	300	2	3.75 x 30mm	7.99	14.84	15.00	1.0
HJHMI350/129	129	350	2 Ply 63	350	2	3.75 x 30mm	7.99	14.84	15.00	1.0
HJHMI400/129	129	400	2 Ply 63	400	2	3.75 x 30mm	7.99	14.84	15.00	1.0
HJHMI184/135	135	184	3 Ply 45 or 133	184	2	3.75 x 30mm	7.99	14.84	15.00	1.0
HJHMI200/135	135	200	3 Ply 45 or 133	200	2	3.75 x 30mm	7.99	14.84	15.00	1.0
HJHMI225/135	135	225	3 Ply 45 or 133	220	2	3.75 x 30mm	7.99	14.84	15.00	1.0
HJHMI240/135	135	240	3 Ply 45 or 133	240	2	3.75 x 30mm	7.99	14.84	15.00	1.0
HJHMI245/135	135	245	3 Ply 45 or 133	245	2	3.75 x 30mm	7.99	14.84	15.00	1.0
HJHMI300/135	135	300	3 Ply 45 or 133	300	2	3.75 x 30mm	7.99	14.84	15.00	1.0
HJHMI350/135	135	350	3 Ply 45 or 133	350	2	3.75 x 30mm	7.99	14.84	15.00	1.0
HJHMI400/135	135	400	3 Ply 45 or 133	400	2	3.75 x 30mm	7.99	14.84	15.00	1.0
HJHMI225/142	142	225	2 ply 70	225	2	3.75 x 30mm	7.99	14.84	15.00	1.0
HJHMI240/142	142	240	2 ply 70	240	2	3.75 x 30mm	7.99	14.84	15.00	1.0
HJHMI300/142	142	300	2 ply 70	300	2	3.75 x 30mm	7.99	14.84	15.00	1.0
HJHMI350/142	142	350	2 ply 70	350	2	3.75 x 30mm	7.99	14.84	15.00	1.0
HJHMI400/142	142	400	2 ply 70	400	2	3.75 x 30mm	7.99	14.84	15.00	1.0

Information presented on this document is the exclusive property of Simpson Strong-Tie®
It is valid only when associated with products supplied by Simpson Strong-Tie®

HJHMI - HEAVY MASONRY HANGER FOR I-JOISTS

References	Hanger Dimensions [mm]		Joist Dimensions [mm]		Joist Fasteners		Safe Working Loads			
							Block Strength [N/mm²]			Short Term Uplift
	Width	Height	Width	Height	Qty	Specification	2.8 - AAC	3.5 - LAC	7.0 - DAC	
HJHMI195/146	146	195	2 Ply 72	195	2	3.75 x 30mm	7.99	14.84	15.00	1.0
HJHMI220/146	146	225	2 Ply 72	220	2	3.75 x 30mm	7.99	14.84	15.00	1.0
HJHMI235/146	146	235	2 Ply 72	235	2	3.75 x 30mm	7.99	14.84	15.00	1.0
HJHMI245/146	146	245	2 Ply 72	245	2	3.75 x 30mm	7.99	14.84	15.00	1.0
HJHMI300/146	146	300	2 Ply 72	300	2	3.75 x 30mm	7.99	14.84	15.00	1.0
HJHMI350/146	146	350	2 Ply 72	350	2	3.75 x 30mm	7.99	14.84	15.00	1.0
HJHMI400/146	146	400	2 Ply 72	400	2	3.75 x 30mm	7.99	14.84	15.00	1.0
HJHMI184/180	180	184	4 Ply 45 or 2 ply 89 or 1 Ply 178	184	2	3.75 x 30mm	7.99	14.84	15.00	1.0
HJHMI195/180	180	195	4 Ply 45 or 2 ply 89 or 1 Ply 178	195	2	3.75 x 30mm	7.99	14.84	15.00	1.0
HJHMI225/180	180	225	4 Ply 45 or 2 ply 89 or 1 Ply 178	220	2	3.75 x 30mm	7.99	14.84	15.00	1.0
HJHMI235/180	180	235	4 Ply 45 or 2 ply 89 or 1 Ply 178	235	2	3.75 x 30mm	7.99	14.84	15.00	1.0
HJHMI240/180	180	240	4 Ply 45 or 2 ply 89 or 1 Ply 178	240	2	3.75 x 30mm	7.99	14.84	15.00	1.0
HJHMI300/180	180	300	4 Ply 45 or 2 ply 89 or 1 Ply 178	300	2	3.75 x 30mm	7.99	14.84	15.00	1.0
HJHMI350/180	180	350	4 Ply 45 or 2 ply 89 or 1 Ply 178	350	2	3.75 x 30mm	7.99	14.84	15.00	1.0
HJHMI400/180	180	400	4 Ply 45 or 2 ply 89 or 1 Ply 178	400	2	3.75 x 30mm	7.99	14.84	15.00	1.0
HJHMI225/184	184	225	2 Ply 90	220	2	3.75 x 30mm	7.99	14.84	15.00	1.0
HJHMI240/184	184	240	2 Ply 90	240	2	3.75 x 30mm	7.99	14.84	15.00	1.0
HJHMI300/184	184	300	2 Ply 90	300	2	3.75 x 30mm	7.99	14.84	15.00	1.0
HJHMI350/184	184	350	2 Ply 90	350	2	3.75 x 30mm	7.99	14.84	15.00	1.0
HJHMI400/184	184	400	2 Ply 90	400	2	3.75 x 30mm	7.99	14.84	15.00	1.0
HJHMI195/196	196	195	2 Ply 97	195	2	3.75 x 30mm	7.99	14.84	15.00	1.0
HJHMI225/196	196	225	2 Ply 97	220	2	3.75 x 30mm	7.99	14.84	15.00	1.0
HJHMI235/196	196	235	2 Ply 97	235	2	3.75 x 30mm	7.99	14.84	15.00	1.0
HJHMI240/196	196	235	2 Ply 97	240	2	3.75 x 30mm	7.99	14.84	15.00	1.0
HJHMI245/196	196	245	2 Ply 97	245	2	3.75 x 30mm	7.99	14.84	15.00	1.0
HJHMI300/196	196	300	2 Ply 97	300	2	3.75 x 30mm	7.99	14.84	15.00	1.0

Information presented on this document is the exclusive property of Simpson Strong-Tie®
It is valid only when associated with products supplied by Simpson Strong-Tie®

References	Hanger Dimensions [mm]		Joist Dimensions [mm]		Joist Fasteners		Safe Working Loads			
	Width	Height	Width	Height	Qty	Specification	Block Strength [N/mm²]			Short Term Uplift
							2.8 - AAC	3.5 - LAC	7.0 - DAC	
HJHMI350/196	196	350	2 Ply 97	350	2	3.75 x 30mm	7.99	14.84	15.00	1.0
HJHMI400/196	196	400	2 Ply 97	400	2	3.75 x 30mm	7.99	14.84	15.00	1.0
HJHMI450/196	196	450	2 Ply 97	450	2	3.75 x 30mm	7.99	14.84	15.00	1.0

Safe Working Loads (91-200mm) - Enhanced Nailing

References	Hanger Dimensions [mm]		Joist Dimensions [mm]		Fasteners		Safe Working Loads			
	Width	Height	Width	Height	Specification	Qty	Block Strength [N/mm²]			Short Term Uplift
							2.8 - AAC	3.5 - LAC	7.0 - DAC	
HJHMI145/91	91	145	2 Ply 45 or 89-90	145	8	4.0 x 90mm	7.99	14.84	20.88	1.0
HJHMI184/91	91	184	2 Ply 45 or 89-90	184	8	4.0 x 90mm	7.99	14.84	20.88	1.0
HJHMI195/91	91	195	2 Ply 45 or 89-90	195	8	4.0 x 90mm	7.99	14.84	20.88	1.0
HJHMI200/91	91	200	2 Ply 45 or 89-90	200	8	4.0 x 90mm	7.99	14.84	20.88	1.0
HJHMI225/91	91	225	2 Ply 45 or 89-90	220	8	4.0 x 90mm	7.99	14.84	20.88	1.0
HJHMI235/91	91	235	2 Ply 45 or 89-90	235	8	4.0 x 90mm	7.99	14.84	20.88	1.0
HJHMI240/91	91	240	2 Ply 45 or 89-90	240	8	4.0 x 90mm	7.99	14.84	20.88	1.0
HJHMI245/91	91	245	2 Ply 45 or 89-90	245	8	4.0 x 90mm	7.99	14.84	20.88	1.0
HJHMI300/91	91	300	2 Ply 45 or 89-90	300	8	4.0 x 90mm	7.99	14.84	20.88	1.0
HJHMI350/91	91	350	2 Ply 45 or 89-90	350	8	4.0 x 90mm	7.99	14.84	20.88	1.0
HJHMI400/91	91	400	2 Ply 45 or 89-90	400	8	4.0 x 90mm	7.99	14.84	20.88	1.0
HJHMI195/96	96	195	2 ply 47	195	8	4.0 x 90mm	7.99	14.84	20.88	1.0
HJHMI225/96	96	225	2 ply 47	220	8	4.0 x 90mm	7.99	14.84	20.88	1.0
HJHMI235/96	96	235	2 ply 47	235	8	4.0 x 90mm	7.99	14.84	20.88	1.0
HJHMI240/96	96	240	2 ply 47	240	8	4.0 x 90mm	7.99	14.84	20.88	1.0
HJHMI245/96	96	245	2 ply 47	245	8	4.0 x 90mm	7.99	14.84	20.88	1.0
HJHMI300/96	96	300	2 ply 47	300	8	4.0 x 90mm	7.99	14.84	20.88	1.0
HJHMI350/96	96	350	2 ply 47	350	8	4.0 x 90mm	7.99	14.84	20.88	1.0
HJHMI400/96	96	400	2 ply 47	400	8	4.0 x 90mm	7.99	14.84	20.88	1.0
HJHMI195/100	100	195	97	195	8	4.0 x 90mm	7.99	14.84	20.88	1.0
HJHMI225/100	100	225	97	220	8	4.0 x 90mm	7.99	14.84	20.88	1.0
HJHMI245/100	100	245	97	245	8	4.0 x 90mm	7.99	14.84	20.88	1.0
HJHMI300/100	100	300	97	300	8	4.0 x 90mm	7.99	14.84	20.88	1.0
HJHMI350/100	100	350	97	350	8	4.0 x 90mm	7.99	14.84	20.88	1.0
HJHMI400/100	100	400	97	400	8	4.0 x 90mm	7.99	14.84	20.88	1.0
HJHMI450/100	100	450	97	450	8	4.0 x 90mm	7.99	14.84	20.88	1.0
HJHMI240/102	102	240	2 Ply 51	240	8	4.0 x 90mm	7.99	14.84	20.88	1.0
HJHMI300/102	102	300	2 Ply 51	300	8	4.0 x 90mm	7.99	14.84	20.88	1.0
HJHMI350/102	102	350	2 Ply 51	350	8	4.0 x 90mm	7.99	14.84	20.88	1.0
HJHMI400/102	102	400	2 Ply 51	400	8	4.0 x 90mm	7.99	14.84	20.88	1.0
HJHMI195/120	120	195	2 Ply 58 or 2 Ply 60	195	8	4.0 x 90mm	7.99	14.84	20.88	1.0
HJHMI200/120	120	200	2 Ply 58 or 2 Ply 60	200	8	4.0 x 90mm	7.99	14.84	20.88	1.0

Information presented on this document is the exclusive property of Simpson Strong-Tie®
It is valid only when associated with products supplied by Simpson Strong-Tie®

HJHMI - HEAVY MASONRY HANGER FOR I-JOISTS

References	Hanger Dimensions [mm]		Joist Dimensions [mm]		Fasteners		Safe Working Loads			
							Block Strength [N/mm²]			Short Term Uplift
	Width	Height	Width	Height	Specification	Qty	2.8 - AAC	3.5 - LAC	7.0 - DAC	
HJHMI225/120	120	225	2 Ply 58 or 2 Ply 60	220	8	4.0 x 90mm	7.99	14.84	20.88	1.0
HJHMI235/120	120	235	2 Ply 58 or 2 Ply 60	235	8	4.0 x 90mm	7.99	14.84	20.88	1.0
HJHMI240/120	120	240	2 Ply 58 or 2 Ply 60	240	8	4.0 x 90mm	7.99	14.84	20.88	1.0
HJHMI245/120	120	245	2 Ply 58 or 2 Ply 60	245	8	4.0 x 90mm	7.99	14.84	20.88	1.0
HJHMI300/120	120	300	2 Ply 58 or 2 Ply 60	300	8	4.0 x 90mm	7.99	14.84	20.88	1.0
HJHMI350/120	120	350	2 Ply 58 or 2 Ply 60	350	8	4.0 x 90mm	7.99	14.84	20.88	1.0
HJHMI400/120	120	400	2 Ply 58 or 2 Ply 60	400	8	4.0 x 90mm	7.99	14.84	20.88	1.0
HJHMI195/129	129	195	2 Ply 63	195	8	4.0 x 90mm	7.99	14.84	20.88	1.0
HJHMI225/129	129	225	2 Ply 63	220-225	8	4.0 x 90mm	7.99	14.84	20.88	1.0
HJHMI235/129	129	235	2 Ply 63	235	8	4.0 x 90mm	7.99	14.84	20.88	1.0
HJHMI240/129	129	240	2 Ply 63	240	8	4.0 x 90mm	7.99	14.84	20.88	1.0
HJHMI245/129	129	245	2 Ply 63	245	8	4.0 x 90mm	7.99	14.84	20.88	1.0
HJHMI300/129	129	300	2 Ply 63	300	8	4.0 x 90mm	7.99	14.84	20.88	1.0
HJHMI350/129	129	350	2 Ply 63	350	8	4.0 x 90mm	7.99	14.84	20.88	1.0
HJHMI400/129	129	400	2 Ply 63	400	8	4.0 x 90mm	7.99	14.84	20.88	1.0
HJHMI184/135	135	184	3 Ply 45 or 133	184	8	4.0 x 90mm	7.99	14.84	20.88	1.0
HJHMI200/135	135	200	3 Ply 45 or 133	200	8	4.0 x 90mm	7.99	14.84	20.88	1.0
HJHMI225/135	135	225	3 Ply 45 or 133	220	8	4.0 x 90mm	7.99	14.84	20.88	1.0
HJHMI240/135	135	240	3 Ply 45 or 133	240	8	4.0 x 90mm	7.99	14.84	20.88	1.0
HJHMI245/135	135	245	3 Ply 45 or 133	245	8	4.0 x 90mm	7.99	14.84	20.88	1.0
HJHMI300/135	135	300	3 Ply 45 or 133	300	8	4.0 x 90mm	7.99	14.84	20.88	1.0
HJHMI350/135	135	350	3 Ply 45 or 133	350	8	4.0 x 90mm	7.99	14.84	20.88	1.0
HJHMI400/135	135	400	3 Ply 45 or 133	400	8	4.0 x 90mm	7.99	14.84	20.88	1.0
HJHMI225/142	142	225	2 ply 70	225	8	4.0 x 90mm	7.99	14.84	20.88	1.0
HJHMI240/142	142	240	2 ply 70	240	8	4.0 x 90mm	7.99	14.84	20.88	1.0
HJHMI300/142	142	300	2 ply 70	300	8	4.0 x 90mm	7.99	14.84	20.88	1.0
HJHMI350/142	142	350	2 ply 70	350	8	4.0 x 90mm	7.99	14.84	20.88	1.0
HJHMI400/142	142	400	2 ply 70	400	8	4.0 x 90mm	7.99	14.84	20.88	1.0
HJHMI195/146	146	195	2 Ply 72	195	8	4.0 x 90mm	7.99	14.84	20.88	1.0
HJHMI220/146	146	225	2 Ply 72	220	8	4.0 x 90mm	7.99	14.84	20.88	1.0
HJHMI235/146	146	235	2 Ply 72	235	8	4.0 x 90mm	7.99	14.84	20.88	1.0
HJHMI245/146	146	245	2 Ply 72	245	8	4.0 x 90mm	7.99	14.84	20.88	1.0
HJHMI300/146	146	300	2 Ply 72	300	8	4.0 x 90mm	7.99	14.84	20.88	1.0
HJHMI350/146	146	350	2 Ply 72	350	8	4.0 x 90mm	7.99	14.84	20.88	1.0
HJHMI400/146	146	400	2 Ply 72	400	8	4.0 x 90mm	7.99	14.84	20.88	1.0
HJHMI184/180	180	184	4 Ply 45 or 2 ply 89 or 1 Ply 178	184	8	4.0 x 90mm	7.99	14.84	20.88	1.0
HJHMI195/180	180	195	4 Ply 45 or 2 ply 89 or 1 Ply 178	195	8	4.0 x 90mm	7.99	14.84	20.88	1.0
HJHMI225/180	180	225	4 Ply 45 or 2 ply 89 or 1 Ply 178	220	8	4.0 x 90mm	7.99	14.84	20.88	1.0

Information presented on this document is the exclusive property of Simpson Strong-Tie®
It is valid only when associated with products supplied by Simpson Strong-Tie®

HJHMI - HEAVY MASONRY HANGER FOR I-JOISTS

References	Hanger Dimensions [mm]		Joist Dimensions [mm]		Fasteners		Safe Working Loads			
							Block Strength [N/mm²]			Short Term Uplift
	Width	Height	Width	Height	Specification	Qty	2.8 - AAC	3.5 - LAC	7.0 - DAC	
HJHMI235/180	180	235	4 Ply 45 or 2 ply 89 or 1 Ply 178	235	8	4.0 x 90mm	7.99	14.84	20.88	1.0
HJHMI240/180	180	240	4 Ply 45 or 2 ply 89 or 1 Ply 178	240	8	4.0 x 90mm	7.99	14.84	20.88	1.0
HJHMI300/180	180	300	4 Ply 45 or 2 ply 89 or 1 Ply 178	300	8	4.0 x 90mm	7.99	14.84	20.88	1.0
HJHMI350/180	180	350	4 Ply 45 or 2 ply 89 or 1 Ply 178	350	8	4.0 x 90mm	7.99	14.84	20.88	1.0
HJHMI400/180	180	400	4 Ply 45 or 2 ply 89 or 1 Ply 178	400	8	4.0 x 90mm	7.99	14.84	20.88	1.0
HJHMI225/184	184	225	2 Ply 90	220	8	4.0 x 90mm	7.99	14.84	20.88	1.0
HJHMI240/184	184	240	2 Ply 90	240	8	4.0 x 90mm	7.99	14.84	20.88	1.0
HJHMI300/184	184	300	2 Ply 90	300	8	4.0 x 90mm	7.99	14.84	20.88	1.0
HJHMI350/184	184	350	2 Ply 90	350	8	4.0 x 90mm	7.99	14.84	20.88	1.0
HJHMI400/184	184	400	2 Ply 90	400	8	4.0 x 90mm	7.99	14.84	20.88	1.0
HJHMI195/196	196	195	2 Ply 97	195	8	4.0 x 90mm	7.99	14.84	20.88	1.0
HJHMI225/196	196	225	2 Ply 97	220	8	4.0 x 90mm	7.99	14.84	20.88	1.0
HJHMI235/196	196	235	2 Ply 97	235	8	4.0 x 90mm	7.99	14.84	20.88	1.0
HJHMI240/196	196	235	2 Ply 97	240	8	4.0 x 90mm	7.99	14.84	20.88	1.0
HJHMI245/196	196	245	2 Ply 97	245	8	4.0 x 90mm	7.99	14.84	20.88	1.0
HJHMI300/196	196	300	2 Ply 97	300	8	4.0 x 90mm	7.99	14.84	20.88	1.0
HJHMI350/196	196	350	2 Ply 97	350	8	4.0 x 90mm	7.99	14.84	20.88	1.0
HJHMI400/196	196	400	2 Ply 97	400	8	4.0 x 90mm	7.99	14.84	20.88	1.0
HJHMI450/196	196	450	2 Ply 97	450	8	4.0 x 90mm	7.99	14.84	20.88	1.0

Safe Working Loads (201-300mm)

References	Hanger Dimensions [mm]		Joist Dimensions [mm]		Joist Fasteners		Safe Working Loads			
							Block Strength [N/mm²]			Short Term Uplift
	Width	Height	Width	Height	Qty	Specification	2.8 - AAC	3.5 - LAC	7.0 - DAC	
HJHMI225/212	212	225	3 ply 70	225	2	3.75 x 30mm	8.15	8.15	21.49	1.0
HJHMI240/212	212	240	3 ply 70	240	2	3.75 x 30mm	8.15	8.15	21.49	1.0

Characteristic: (40 - 74mm)

References	Hanger Dimensions [mm]		Joist Dimensions [mm]		Joist Fasteners		Characteristic Capacity [kN]			
							Block Strength [N/mm²]			Uplift
	Width	Height	Width	Height	Qty	Specification	2.8 - AAC	3.5 - LAC	7.0 - DAC	
HJHMI225/47	47	225	45	220	2	3.75 x 30mm	16.02	16.02	30.01	1.8
HJHMI240/47	47	240	45	240	2	3.75 x 30mm	16.02	16.02	30.01	1.8
HJHMI300/47	47	300	45	300	2	3.75 x 30mm	16.02	16.02	30.01	1.8
HJHMI350/47	47	350	45	350	2	3.75 x 30mm	16.02	16.02	30.01	1.8
HJHMI400/47	47	400	45	400	2	3.75 x 30mm	16.02	16.02	30.01	1.8
HJHMI225/50	50	225	47	220	2	3.75 x 30mm	16.02	16.02	30.01	1.8

Winchester Road Cardinal Point Tamworth Staffordshire B78 3HG
Tél. : +44 1827 255600 / Fax : +44 1827 255616

Information presented on this document is the exclusive property of Simpson Strong-Tie®
It is valid only when associated with products supplied by Simpson Strong-Tie®

HJHMI - HEAVY MASONRY HANGER FOR I-JOISTS

References	Hanger Dimensions [mm]		Joist Dimensions [mm]		Joist Fasteners		Characteristic Capacity [kN]			
							Block Strength [N/mm²]			Uplift
	Width	Height	Width	Height	Qty	Specification	2.8 - AAC	3.5 - LAC	7.0 - DAC	
HJHMI235/50	50	235	47	235	2	3.75 x 30mm	16.02	16.02	30.01	1.8
HJHMI240/50	50	240	47	240	2	3.75 x 30mm	16.02	16.02	30.01	1.8
HJHMI245/50	50	245	47	245	2	3.75 x 30mm	16.02	16.02	30.01	1.8
HJHMI300/50	50	300	47	300	2	3.75 x 30mm	16.02	16.02	30.01	1.8
HJHMI350/50	50	350	47	350	2	3.75 x 30mm	16.02	16.02	30.01	1.8
HJHMI400/50	50	400	47	400	2	3.75 x 30mm	16.02	16.02	30.01	1.8
HJHMI195/66	66	195	63	195	2	3.75 x 30mm	16.02	16.02	30.01	1.8
HJHMI225/66	66	225	63	220-225	2	3.75 x 30mm	16.02	16.02	30.01	1.8
HJHMI235/66	66	235	63	235	2	3.75 x 30mm	16.02	16.02	30.01	1.8
HJHMI245/66	66	245	63	245	2	3.75 x 30mm	16.02	16.02	30.01	1.8
HJHMI300/66	66	300	63	300	2	3.75 x 30mm	16.02	16.02	30.01	1.8
HJHMI350/66	66	350	63	350	2	3.75 x 30mm	16.02	16.02	30.01	1.8
HJHMI400/66	66	400	63	400	2	3.75 x 30mm	16.02	16.02	30.01	1.8
HJHMI200/72	72	200	70	200	2	3.75 x 30mm	16.02	16.02	30.01	1.8
HJHMI225/72	72	225	70	220	2	3.75 x 30mm	16.02	16.02	30.01	1.8
HJHMI240/72	72	240	70	240	2	3.75 x 30mm	16.02	16.02	30.01	1.8
HJHMI300/72	72	300	70	300	2	3.75 x 30mm	16.02	16.02	30.01	1.8
HJHMI350/72	72	350	70	350	2	3.75 x 30mm	16.02	16.02	30.01	1.8
HJHMI400/72	72	400	70	400	2	3.75 x 30mm	16.02	16.02	30.01	1.8

Characteristic: (75 - 200mm)

References	Hanger Dimensions [mm]		Joist Dimensions [mm]		Joist Fasteners		Characteristic Capacity [kN]			
							Block Strength [N/mm²]			Uplift
	Width	Height	Width	Height	Qty	Specification	2.8 - AAC	3.5 - LAC	7.0 - DAC	
HJHMI195/75	75	195	72	195	2	3.75 x 30mm	15.98	29.67	30.01	1.8
HJHMI225/75	75	225	72	220	2	3.75 x 30mm	15.98	29.67	30.01	1.8
HJHMI235/75	75	235	72	235	2	3.75 x 30mm	15.98	29.67	30.01	1.8
HJHMI245/75	75	245	72	245	2	3.75 x 30mm	15.98	29.67	30.01	1.8
HJHMI300/75	75	300	72	300	2	3.75 x 30mm	15.98	29.67	30.01	1.8
HJHMI195/78	78	195	2 Ply 38	195	2	3.75 x 30mm	15.98	29.67	30.01	1.8
HJHMI225/78	78	225	3 Ply 38	220	2	3.75 x 30mm	15.98	29.67	30.01	1.8

Information presented on this document is the exclusive property of Simpson Strong-Tie®
It is valid only when associated with products supplied by Simpson Strong-Tie®

HJHMI - HEAVY MASONRY HANGER FOR I-JOISTS

SIMPSON Strong-Tie

References	Hanger Dimensions [mm]		Joist Dimensions [mm]		Joist Fasteners		Characteristic Capacity [kN]			
							Block Strength [N/mm²]			Uplift
	Width	Height	Width	Height	Qty	Specification	2.8 - AAC	3.5 - LAC	7.0 - DAC	
HJHMI235/78	78	235	4 Ply 38	235	2	3.75 x 30mm	15.98	29.67	30.01	1.8
HJHMI240/78	78	240	5 Ply 38	240	2	3.75 x 30mm	15.98	29.67	30.01	1.8
HJHMI245/78	78	245	6 Ply 38	245	2	3.75 x 30mm	15.98	29.67	30.01	1.8
HJHMI300/78	78	300	7 Ply 38	300	2	3.75 x 30mm	15.98	29.67	30.01	1.8
HJHMI400/78	78	400	8 Ply 38	400	2	3.75 x 30mm	15.98	29.67	30.01	1.8
HJHMI145/91	91	145	2 Ply 45 or 89-90	145	2	3.75 x 30mm	15.98	29.67	30.01	1.8
HJHMI184/91	91	184	2 Ply 45 or 89-90	184	2	3.75 x 30mm	15.98	29.67	30.01	1.8
HJHMI195/91	91	195	2 Ply 45 or 89-90	195	2	3.75 x 30mm	15.98	29.67	30.01	1.8
HJHMI200/91	91	200	2 Ply 45 or 89-90	200	2	3.75 x 30mm	15.98	29.67	30.01	1.8
HJHMI225/91	91	225	2 Ply 45 or 89-90	220	2	3.75 x 30mm	15.98	29.67	30.01	1.8
HJHMI235/91	91	235	2 Ply 45 or 89-90	235	2	3.75 x 30mm	15.98	29.67	30.01	1.8
HJHMI240/91	91	240	2 Ply 45 or 89-90	240	2	3.75 x 30mm	15.98	29.67	30.01	1.8
HJHMI245/91	91	245	2 Ply 45 or 89-90	245	2	3.75 x 30mm	15.98	29.67	30.01	1.8
HJHMI300/91	91	300	2 Ply 45 or 89-90	300	2	3.75 x 30mm	15.98	29.67	30.01	1.8
HJHMI350/91	91	350	2 Ply 45 or 89-90	350	2	3.75 x 30mm	15.98	29.67	30.01	1.8
HJHMI400/91	91	400	2 Ply 45 or 89-90	400	2	3.75 x 30mm	15.98	29.67	30.01	1.8
HJHMI195/96	96	195	2 ply 47	195	2	3.75 x 30mm	15.98	29.67	30.01	1.8
HJHMI225/96	96	225	2 ply 47	220	2	3.75 x 30mm	15.98	29.67	30.01	1.8
HJHMI235/96	96	235	2 ply 47	235	2	3.75 x 30mm	15.98	29.67	30.01	1.8
HJHMI240/96	96	240	2 ply 47	240	2	3.75 x 30mm	15.98	29.67	30.01	1.8
HJHMI245/96	96	245	2 ply 47	245	2	3.75 x 30mm	15.98	29.67	30.01	1.8
HJHMI300/96	96	300	2 ply 47	300	2	3.75 x 30mm	15.98	29.67	30.01	1.8
HJHMI350/96	96	350	2 ply 47	350	2	3.75 x 30mm	15.98	29.67	30.01	1.8
HJHMI400/96	96	400	2 ply 47	400	2	3.75 x 30mm	15.98	29.67	30.01	1.8
HJHMI195/100	100	195	97	195	2	3.75 x 30mm	15.98	29.67	30.01	1.8
HJHMI225/100	100	225	97	220	2	3.75 x 30mm	15.98	29.67	30.01	1.8
HJHMI245/100	100	245	97	245	2	3.75 x 30mm	15.98	29.67	30.01	1.8
HJHMI300/100	100	300	97	300	2	3.75 x 30mm	15.98	29.67	30.01	1.8
HJHMI350/100	100	350	97	350	2	3.75 x 30mm	15.98	29.67	30.01	1.8
HJHMI400/100	100	400	97	400	2	3.75 x 30mm	15.98	29.67	30.01	1.8

Information presented on this document is the exclusive property of Simpson Strong-Tie®
It is valid only when associated with products supplied by Simpson Strong-Tie®

HJHMI - HEAVY MASONRY HANGER FOR I-JOISTS

References	Hanger Dimensions [mm]		Joist Dimensions [mm]		Joist Fasteners		Characteristic Capacity [kN]			
							Block Strength [N/mm²]			Uplift
	Width	Height	Width	Height	Qty	Specification	2.8 - AAC	3.5 - LAC	7.0 - DAC	
HJHMI450/100	100	450	97	450	2	3.75 x 30mm	15.98	29.67	30.01	1.8
HJHMI240/102	102	240	2 Ply 51	240	2	3.75 x 30mm	15.98	29.67	30.01	1.8
HJHMI300/102	102	300	2 Ply 51	300	2	3.75 x 30mm	15.98	29.67	30.01	1.8
HJHMI350/102	102	350	2 Ply 51	350	2	3.75 x 30mm	15.98	29.67	30.01	1.8
HJHMI400/102	102	400	2 Ply 51	400	2	3.75 x 30mm	15.98	29.67	30.01	1.8
HJHMI195/120	120	195	2 Ply 58 or 2 Ply 60	195	2	3.75 x 30mm	15.98	29.67	30.01	1.8
HJHMI200/120	120	200	2 Ply 58 or 2 Ply 60	200	2	3.75 x 30mm	15.98	29.67	30.01	1.8
HJHMI225/120	120	225	2 Ply 58 or 2 Ply 60	220	2	3.75 x 30mm	15.98	29.67	30.01	1.8
HJHMI235/120	120	235	2 Ply 58 or 2 Ply 60	235	2	3.75 x 30mm	15.98	29.67	30.01	1.8
HJHMI240/120	120	240	2 Ply 58 or 2 Ply 60	240	2	3.75 x 30mm	15.98	29.67	30.01	1.8
HJHMI245/120	120	245	2 Ply 58 or 2 Ply 60	245	2	3.75 x 30mm	15.98	29.67	30.01	1.8
HJHMI300/120	120	300	2 Ply 58 or 2 Ply 60	300	2	3.75 x 30mm	15.98	29.67	30.01	1.8
HJHMI350/120	120	350	2 Ply 58 or 2 Ply 60	350	2	3.75 x 30mm	15.98	29.67	30.01	1.8
HJHMI400/120	120	400	2 Ply 58 or 2 Ply 60	400	2	3.75 x 30mm	15.98	29.67	30.01	1.8
HJHMI195/129	129	195	2 Ply 63	195	2	3.75 x 30mm	15.98	29.67	30.01	1.8
HJHMI225/129	129	225	2 Ply 63	220-225	2	3.75 x 30mm	15.98	29.67	30.01	1.8
HJHMI235/129	129	235	2 Ply 63	235	2	3.75 x 30mm	15.98	29.67	30.01	1.8
HJHMI240/129	129	240	2 Ply 63	240	2	3.75 x 30mm	15.98	29.67	30.01	1.8
HJHMI245/129	129	245	2 Ply 63	245	2	3.75 x 30mm	15.98	29.67	30.01	1.8
HJHMI300/129	129	300	2 Ply 63	300	2	3.75 x 30mm	15.98	29.67	30.01	1.8
HJHMI350/129	129	350	2 Ply 63	350	2	3.75 x 30mm	15.98	29.67	30.01	1.8
HJHMI400/129	129	400	2 Ply 63	400	2	3.75 x 30mm	15.98	29.67	30.01	1.8
HJHMI184/135	135	184	3 Ply 45 or 133	184	2	3.75 x 30mm	15.98	29.67	30.01	1.8
HJHMI200/135	135	200	3 Ply 45 or 133	200	2	3.75 x 30mm	15.98	29.67	30.01	1.8
HJHMI225/135	135	225	3 Ply 45 or 133	220	2	3.75 x 30mm	15.98	29.67	30.01	1.8
HJHMI240/135	135	240	3 Ply 45 or 133	240	2	3.75 x 30mm	15.98	29.67	30.01	1.8
HJHMI245/135	135	245	3 Ply 45 or 133	245	2	3.75 x 30mm	15.98	29.67	30.01	1.8
HJHMI300/135	135	300	3 Ply 45 or 133	300	2	3.75 x 30mm	15.98	29.67	30.01	1.8
HJHMI350/135	135	350	3 Ply 45 or 133	350	2	3.75 x 30mm	15.98	29.67	30.01	1.8
HJHMI400/135	135	400	3 Ply 45 or 133	400	2	3.75 x 30mm	15.98	29.67	30.01	1.8

Winchester Road Cardinal Point Tamworth Staffordshire B78 3HG
Tél. : +44 1827 255600 / Fax : +44 1827 255616

Information presented on this document is the exclusive property of Simpson Strong-Tie®
It is valid only when associated with products supplied by Simpson Strong-Tie®

HJHMI - HEAVY MASONRY HANGER FOR I-JOISTS

References	Hanger Dimensions [mm]		Joist Dimensions [mm]		Joist Fasteners		Characteristic Capacity [kN]			
							Block Strength [N/mm²]			Uplift
	Width	Height	Width	Height	Qty	Specification	2.8 - AAC	3.5 - LAC	7.0 - DAC	
HJHMI225/142	142	225	2 ply 70	225	2	3.75 x 30mm	15.98	29.67	30.01	1.8
HJHMI240/142	142	240	2 ply 70	240	2	3.75 x 30mm	15.98	29.67	30.01	1.8
HJHMI300/142	142	300	2 ply 70	300	2	3.75 x 30mm	15.98	29.67	30.01	1.8
HJHMI350/142	142	350	2 ply 70	350	2	3.75 x 30mm	15.98	29.67	30.01	1.8
HJHMI400/142	142	400	2 ply 70	400	2	3.75 x 30mm	15.98	29.67	30.01	1.8
HJHMI195/146	146	195	2 Ply 72	195	2	3.75 x 30mm	15.98	29.67	30.01	1.8
HJHMI220/146	146	225	2 Ply 72	220	2	3.75 x 30mm	15.98	29.67	30.01	1.8
HJHMI235/146	146	235	2 Ply 72	235	2	3.75 x 30mm	15.98	29.67	30.01	1.8
HJHMI245/146	146	245	2 Ply 72	245	2	3.75 x 30mm	15.98	29.67	30.01	1.8
HJHMI300/146	146	300	2 Ply 72	300	2	3.75 x 30mm	15.98	29.67	30.01	1.8
HJHMI350/146	146	350	2 Ply 72	350	2	3.75 x 30mm	15.98	29.67	30.01	1.8
HJHMI400/146	146	400	2 Ply 72	400	2	3.75 x 30mm	15.98	29.67	30.01	1.8
HJHMI184/180	180	184	4 Ply 45 or 2 ply 89 or 1 Ply 178	184	2	3.75 x 30mm	15.98	29.67	30.01	1.8
HJHMI195/180	180	195	4 Ply 45 or 2 ply 89 or 1 Ply 178	195	2	3.75 x 30mm	15.98	29.67	30.01	1.8
HJHMI225/180	180	225	4 Ply 45 or 2 ply 89 or 1 Ply 178	220	2	3.75 x 30mm	15.98	29.67	30.01	1.8
HJHMI235/180	180	235	4 Ply 45 or 2 ply 89 or 1 Ply 178	235	2	3.75 x 30mm	15.98	29.67	30.01	1.8
HJHMI240/180	180	240	4 Ply 45 or 2 ply 89 or 1 Ply 178	240	2	3.75 x 30mm	15.98	29.67	30.01	1.8
HJHMI300/180	180	300	4 Ply 45 or 2 ply 89 or 1 Ply 178	300	2	3.75 x 30mm	15.98	29.67	30.01	1.8
HJHMI350/180	180	350	4 Ply 45 or 2 ply 89 or 1 Ply 178	350	2	3.75 x 30mm	15.98	29.67	30.01	1.8
HJHMI400/180	180	400	4 Ply 45 or 2 ply 89 or 1 Ply 178	400	2	3.75 x 30mm	15.98	29.67	30.01	1.8
HJHMI225/184	184	225	2 Ply 90	220	2	3.75 x 30mm	15.98	29.67	30.01	1.8
HJHMI240/184	184	240	2 Ply 90	240	2	3.75 x 30mm	15.98	29.67	30.01	1.8
HJHMI300/184	184	300	2 Ply 90	300	2	3.75 x 30mm	15.98	29.67	30.01	1.8
HJHMI350/184	184	350	2 Ply 90	350	2	3.75 x 30mm	15.98	29.67	30.01	1.8
HJHMI400/184	184	400	2 Ply 90	400	2	3.75 x 30mm	15.98	29.67	30.01	1.8
HJHMI195/196	196	195	2 Ply 97	195	2	3.75 x 30mm	15.98	29.67	30.01	1.8

Winchester Road Cardinal Point Tamworth Staffordshire B78 3HG
Tél. : +44 1827 255600 / Fax : +44 1827 255616

Information presented on this document is the exclusive property of Simpson Strong-Tie®
It is valid only when associated with products supplied by Simpson Strong-Tie®

HJHMI - HEAVY MASONRY HANGER FOR I-JOISTS

References	Hanger Dimensions [mm]		Joist Dimensions [mm]		Joist Fasteners		Characteristic Capacity [kN]			
							Block Strength [N/mm²]			Uplift
	Width	Height	Width	Height	Qty	Specification	2.8 - AAC	3.5 - LAC	7.0 - DAC	
HJHMI225/196	196	225	2 Ply 97	220	2	3.75 x 30mm	15.98	29.67	30.01	1.8
HJHMI235/196	196	235	2 Ply 97	235	2	3.75 x 30mm	15.98	29.67	30.01	1.8
HJHMI240/196	196	235	2 Ply 97	240	2	3.75 x 30mm	15.98	29.67	30.01	1.8
HJHMI245/196	196	245	2 Ply 97	245	2	3.75 x 30mm	15.98	29.67	30.01	1.8
HJHMI300/196	196	300	2 Ply 97	300	2	3.75 x 30mm	15.98	29.67	30.01	1.8
HJHMI350/196	196	350	2 Ply 97	350	2	3.75 x 30mm	15.98	29.67	30.01	1.8
HJHMI400/196	196	400	2 Ply 97	400	2	3.75 x 30mm	15.98	29.67	30.01	1.8
HJHMI450/196	196	450	2 Ply 97	450	2	3.75 x 30mm	15.98	29.67	30.01	1.8

Characteristic: (91 - 200mm) - Enhanced Nailing

References	Hanger Dimensions [mm]		Joist Dimensions [mm]		Fasteners		Characteristic Capacity [kN]			
							Block Strength [N/mm²]			Uplift
	Width	Height	Width	Height	Qty	Specification	2.8 - AAC	3.5 - LAC	7.0 - DAC	
HJHMI145/91	91	145	2 Ply 45 or 89-90	145	4.0 x 90mm	8	15.98	29.67	41.76	1.8
HJHMI184/91	91	184	2 Ply 45 or 89-90	184	4.0 x 90mm	8	15.98	29.67	41.76	1.8
HJHMI195/91	91	195	2 Ply 45 or 89-90	195	4.0 x 90mm	8	15.98	29.67	41.76	1.8
HJHMI200/91	91	200	2 Ply 45 or 89-90	200	4.0 x 90mm	8	15.98	29.67	41.76	1.8
HJHMI225/91	91	225	2 Ply 45 or 89-90	220	4.0 x 90mm	8	15.98	29.67	41.76	1.8
HJHMI235/91	91	235	2 Ply 45 or 89-90	235	4.0 x 90mm	8	15.98	29.67	41.76	1.8
HJHMI240/91	91	240	2 Ply 45 or 89-90	240	4.0 x 90mm	8	15.98	29.67	41.76	1.8
HJHMI245/91	91	245	2 Ply 45 or 89-90	245	4.0 x 90mm	8	15.98	29.67	41.76	1.8
HJHMI300/91	91	300	2 Ply 45 or 89-90	300	4.0 x 90mm	8	15.98	29.67	41.76	1.8
HJHMI350/91	91	350	2 Ply 45 or 89-90	350	4.0 x 90mm	8	15.98	29.67	41.76	1.8
HJHMI400/91	91	400	2 Ply 45 or 89-90	400	4.0 x 90mm	8	15.98	29.67	41.76	1.8
HJHMI195/96	96	195	2 ply 47	195	4.0 x 90mm	8	15.98	29.67	41.76	1.8
HJHMI225/96	96	225	2 ply 47	220	4.0 x 90mm	8	15.98	29.67	41.76	1.8
HJHMI235/96	96	235	2 ply 47	235	4.0 x 90mm	8	15.98	29.67	41.76	1.8
HJHMI240/96	96	240	2 ply 47	240	4.0 x 90mm	8	15.98	29.67	41.76	1.8
HJHMI245/96	96	245	2 ply 47	245	4.0 x 90mm	8	15.98	29.67	41.76	1.8
HJHMI300/96	96	300	2 ply 47	300	4.0 x 90mm	8	15.98	29.67	41.76	1.8
HJHMI350/96	96	350	2 ply 47	350	4.0 x 90mm	8	15.98	29.67	41.76	1.8
HJHMI400/96	96	400	2 ply 47	400	4.0 x 90mm	8	15.98	29.67	41.76	1.8
HJHMI195/100	100	195	97	195	4.0 x 90mm	8	15.98	29.67	41.76	1.8
HJHMI225/100	100	225	97	220	4.0 x 90mm	8	15.98	29.67	41.76	1.8
HJHMI245/100	100	245	97	245	4.0 x 90mm	8	15.98	29.67	41.76	1.8
HJHMI300/100	100	300	97	300	4.0 x 90mm	8	15.98	29.67	41.76	1.8
HJHMI350/100	100	350	97	350	4.0 x 90mm	8	15.98	29.67	41.76	1.8
HJHMI400/100	100	400	97	400	4.0 x 90mm	8	15.98	29.67	41.76	1.8

Winchester Road Cardinal Point Tamworth Staffordshire B78 3HG
Tél. : +44 1827 255600 / Fax : +44 1827 255616

Information presented on this document is the exclusive property of Simpson Strong-Tie®
It is valid only when associated with products supplied by Simpson Strong-Tie®

HJHMI - HEAVY MASONRY HANGER FOR I-JOISTS

SIMPSON Strong-Tie

References	Hanger Dimensions [mm]		Joist Dimensions [mm]		Fasteners		Characteristic Capacity [kN]			
							Block Strength [N/mm²]			Uplift
	Width	Height	Width	Height	Qty	Specification	2.8 - AAC	3.5 - LAC	7.0 - DAC	
HJHMI450/100	100	450	97	450	4.0 x 90mm	8	15.98	29.67	41.76	1.8
HJHMI240/102	102	240	2 Ply 51	240	4.0 x 90mm	8	15.98	29.67	41.76	1.8
HJHMI300/102	102	300	2 Ply 51	300	4.0 x 90mm	8	15.98	29.67	41.76	1.8
HJHMI350/102	102	350	2 Ply 51	350	4.0 x 90mm	8	15.98	29.67	41.76	1.8
HJHMI400/102	102	400	2 Ply 51	400	4.0 x 90mm	8	15.98	29.67	41.76	1.8
HJHMI195/120	120	195	2 Ply 58 or 2 Ply 60	195	4.0 x 90mm	8	15.98	29.67	41.76	1.8
HJHMI200/120	120	200	2 Ply 58 or 2 Ply 60	200	4.0 x 90mm	8	15.98	29.67	41.76	1.8
HJHMI225/120	120	225	2 Ply 58 or 2 Ply 60	220	4.0 x 90mm	8	15.98	29.67	41.76	1.8
HJHMI235/120	120	235	2 Ply 58 or 2 Ply 60	235	4.0 x 90mm	8	15.98	29.67	41.76	1.8
HJHMI240/120	120	240	2 Ply 58 or 2 Ply 60	240	4.0 x 90mm	8	15.98	29.67	41.76	1.8
HJHMI245/120	120	245	2 Ply 58 or 2 Ply 60	245	4.0 x 90mm	8	15.98	29.67	41.76	1.8
HJHMI300/120	120	300	2 Ply 58 or 2 Ply 60	300	4.0 x 90mm	8	15.98	29.67	41.76	1.8
HJHMI350/120	120	350	2 Ply 58 or 2 Ply 60	350	4.0 x 90mm	8	15.98	29.67	41.76	1.8
HJHMI400/120	120	400	2 Ply 58 or 2 Ply 60	400	4.0 x 90mm	8	15.98	29.67	41.76	1.8
HJHMI195/129	129	195	2 Ply 63	195	4.0 x 90mm	8	15.98	29.67	41.76	1.8
HJHMI225/129	129	225	2 Ply 63	220-225	4.0 x 90mm	8	15.98	29.67	41.76	1.8
HJHMI235/129	129	235	2 Ply 63	235	4.0 x 90mm	8	15.98	29.67	41.76	1.8
HJHMI240/129	129	240	2 Ply 63	240	4.0 x 90mm	8	15.98	29.67	41.76	1.8
HJHMI245/129	129	245	2 Ply 63	245	4.0 x 90mm	8	15.98	29.67	41.76	1.8
HJHMI300/129	129	300	2 Ply 63	300	4.0 x 90mm	8	15.98	29.67	41.76	1.8
HJHMI350/129	129	350	2 Ply 63	350	4.0 x 90mm	8	15.98	29.67	41.76	1.8
HJHMI400/129	129	400	2 Ply 63	400	4.0 x 90mm	8	15.98	29.67	41.76	1.8
HJHMI184/135	135	184	3 Ply 45 or 133	184	4.0 x 90mm	8	15.98	29.67	41.76	1.8
HJHMI200/135	135	200	3 Ply 45 or 133	200	4.0 x 90mm	8	15.98	29.67	41.76	1.8
HJHMI225/135	135	225	3 Ply 45 or 133	220	4.0 x 90mm	8	15.98	29.67	41.76	1.8
HJHMI240/135	135	240	3 Ply 45 or 133	240	4.0 x 90mm	8	15.98	29.67	41.76	1.8
HJHMI245/135	135	245	3 Ply 45 or 133	245	4.0 x 90mm	8	15.98	29.67	41.76	1.8
HJHMI300/135	135	300	3 Ply 45 or 133	300	4.0 x 90mm	8	15.98	29.67	41.76	1.8
HJHMI350/135	135	350	3 Ply 45 or 133	350	4.0 x 90mm	8	15.98	29.67	41.76	1.8
HJHMI400/135	135	400	3 Ply 45 or 133	400	4.0 x 90mm	8	15.98	29.67	41.76	1.8
HJHMI225/142	142	225	2 ply 70	225	4.0 x 90mm	8	15.98	29.67	41.76	1.8
HJHMI240/142	142	240	2 ply 70	240	4.0 x 90mm	8	15.98	29.67	41.76	1.8
HJHMI300/142	142	300	2 ply 70	300	4.0 x 90mm	8	15.98	29.67	41.76	1.8
HJHMI350/142	142	350	2 ply 70	350	4.0 x 90mm	8	15.98	29.67	41.76	1.8
HJHMI400/142	142	400	2 ply 70	400	4.0 x 90mm	8	15.98	29.67	41.76	1.8
HJHMI195/146	146	195	2 Ply 72	195	4.0 x 90mm	8	15.98	29.67	41.76	1.8
HJHMI220/146	146	225	2 Ply 72	220	4.0 x 90mm	8	15.98	29.67	41.76	1.8
HJHMI235/146	146	235	2 Ply 72	235	4.0 x 90mm	8	15.98	29.67	41.76	1.8
HJHMI245/146	146	245	2 Ply 72	245	4.0 x 90mm	8	15.98	29.67	41.76	1.8
HJHMI300/146	146	300	2 Ply 72	300	4.0 x 90mm	8	15.98	29.67	41.76	1.8
HJHMI350/146	146	350	2 Ply 72	350	4.0 x 90mm	8	15.98	29.67	41.76	1.8
HJHMI400/146	146	400	2 Ply 72	400	4.0 x 90mm	8	15.98	29.67	41.76	1.8

Information presented on this document is the exclusive property of Simpson Strong-Tie®
It is valid only when associated with products supplied by Simpson Strong-Tie®

HJHMI - HEAVY MASONRY HANGER FOR I-JOISTS

References	Hanger Dimensions [mm]		Joist Dimensions [mm]		Fasteners		Characteristic Capacity [kN]			
	Width	Height	Width	Height	Qty	Specification	Block Strength [N/mm²]			Uplift
							2.8 - AAC	3.5 - LAC	7.0 - DAC	
HJHMI184/180	180	184	4 Ply 45 or 2 ply 89 or 1 Ply 178	184	4.0 x 90mm	8	15.98	29.67	41.76	1.8
HJHMI195/180	180	195	4 Ply 45 or 2 ply 89 or 1 Ply 178	195	4.0 x 90mm	8	15.98	29.67	41.76	1.8
HJHMI225/180	180	225	4 Ply 45 or 2 ply 89 or 1 Ply 178	220	4.0 x 90mm	8	15.98	29.67	41.76	1.8
HJHMI235/180	180	235	4 Ply 45 or 2 ply 89 or 1 Ply 178	235	4.0 x 90mm	8	15.98	29.67	41.76	1.8
HJHMI240/180	180	240	4 Ply 45 or 2 ply 89 or 1 Ply 178	240	4.0 x 90mm	8	15.98	29.67	41.76	1.8
HJHMI300/180	180	300	4 Ply 45 or 2 ply 89 or 1 Ply 178	300	4.0 x 90mm	8	15.98	29.67	41.76	1.8
HJHMI350/180	180	350	4 Ply 45 or 2 ply 89 or 1 Ply 178	350	4.0 x 90mm	8	15.98	29.67	41.76	1.8
HJHMI400/180	180	400	4 Ply 45 or 2 ply 89 or 1 Ply 178	400	4.0 x 90mm	8	15.98	29.67	41.76	1.8
HJHMI225/184	184	225	2 Ply 90	220	4.0 x 90mm	8	15.98	29.67	41.76	1.8
HJHMI240/184	184	240	2 Ply 90	240	4.0 x 90mm	8	15.98	29.67	41.76	1.8
HJHMI300/184	184	300	2 Ply 90	300	4.0 x 90mm	8	15.98	29.67	41.76	1.8
HJHMI350/184	184	350	2 Ply 90	350	4.0 x 90mm	8	15.98	29.67	41.76	1.8
HJHMI400/184	184	400	2 Ply 90	400	4.0 x 90mm	8	15.98	29.67	41.76	1.8
HJHMI195/196	196	195	2 Ply 97	195	4.0 x 90mm	8	15.98	29.67	41.76	1.8
HJHMI225/196	196	225	2 Ply 97	220	4.0 x 90mm	8	15.98	29.67	41.76	1.8
HJHMI235/196	196	235	2 Ply 97	235	4.0 x 90mm	8	15.98	29.67	41.76	1.8
HJHMI240/196	196	235	2 Ply 97	240	4.0 x 90mm	8	15.98	29.67	41.76	1.8
HJHMI245/196	196	245	2 Ply 97	245	4.0 x 90mm	8	15.98	29.67	41.76	1.8
HJHMI300/196	196	300	2 Ply 97	300	4.0 x 90mm	8	15.98	29.67	41.76	1.8
HJHMI350/196	196	350	2 Ply 97	350	4.0 x 90mm	8	15.98	29.67	41.76	1.8
HJHMI400/196	196	400	2 Ply 97	400	4.0 x 90mm	8	15.98	29.67	41.76	1.8
HJHMI450/196	196	450	2 Ply 97	450	4.0 x 90mm	8	15.98	29.67	41.76	1.8

Characteristic: (201 - 300mm)

References	Hanger Dimensions [mm]		Joist Dimensions [mm]		Joist Fasteners		Characteristic Capacity [kN]			
	Width	Height	Width	Height	Qty	Specification	Block Strength [N/mm²]			Uplift
							2.8 - AAC	3.5 - LAC	7.0 - DAC	
HJHMI225/212	212	225	3 ply 70	225	2	3.75 x 30mm	15.11	15.11	37.61	1.8
HJHMI240/212	212	240	3 ply 70	240	2	3.75 x 30mm	15.11	15.11	37.61	1.8

Information presented on this document is the exclusive property of Simpson Strong-Tie®
It is valid only when associated with products supplied by Simpson Strong-Tie®

INSTALLATION

Installation

- Use all specified fasteners.
- Set hanger back flange tight against block wall when built to desired level, then continue with additional courses to complete wall height. Joist should be tight into back of hanger when possible. Maximum gap permitted is 6mm.
- MINIMUM 3 COURSES OF SOLID BLOCK (675MM MASONRY) REQUIRED ABOVE HANGER WITH MORTAR FULLY CURED BEFORE APPLYING LOAD.
- Do not stack blocks or heavy loads on the joists during construction unless the joists have additional support to take the full load of the blocks vertically and horizontally.

TECHNICAL NOTES

Notes

1. The above Safe Working Loads are based upon product tests using four No. Hilti 12mm X-EDNI steel pins fired through holes provided in the top flange of the hangers onto 4mm thick steel plate. Other pins may be used provided similar structural performance is verified by the pin manufacturer. Pin Head size must be sufficient to prevent pull through during loading.
1. The designer must ensure that the steel support member will support the imposed loads.
2. Install shot-fired pins in accordance with manufacturer's instructions.

Winchester Road Cardinal Point Tamworth Staffordshire B78 3HG
Tél. : +44 1827 255600 / Fax : +44 1827 255616
Information presented on this document is the exclusive property of Simpson Strong-Tie®
It is valid only when associated with products supplied by Simpson Strong-Tie®