# HYDE 60X46CM WASHBASIN 1TH



**Product Code:** HY060B

## PRODUCT INFORMATION

| | |
|---|---|
| **Finish:** | Gloss White |
| **Height:** | 160mm |
| **Width:** | 605mm |
| **Depth:** | 460mm |
| **Material** | Ceramic |
| **Weight** | 15.7kg |
| **Overflow(s)** | Yes |
| **Overflow Position** | Centre |
| **Overflow Diameter** | 22mm |
| **Compatible Overflows** | OC01, OC02, OC03 |
| **Tap Holes** | 1 Tap Hole |
| **Tap Hole Position** | Centre |
| **Recommended Waste Required** | Slotted waste |
| **Furniture Required For Installation?** | Optional |
| **Guarantee** | Lifetime |

## DESCRIPTION

The HYDE collection features curved short projection washbasins and furniture units, but for those who have the space to spare, there is also the option for much deeper basin & unit combinations.

This HYDE 60x46cm 1 tap hole washbasin has a deeper bowl that is great for family bathrooms and communal areas, and pairs with the HYDE 60cm 1 or 2 drawer wall mounted units.

*With an overflow

# TECHNICAL DRAWING

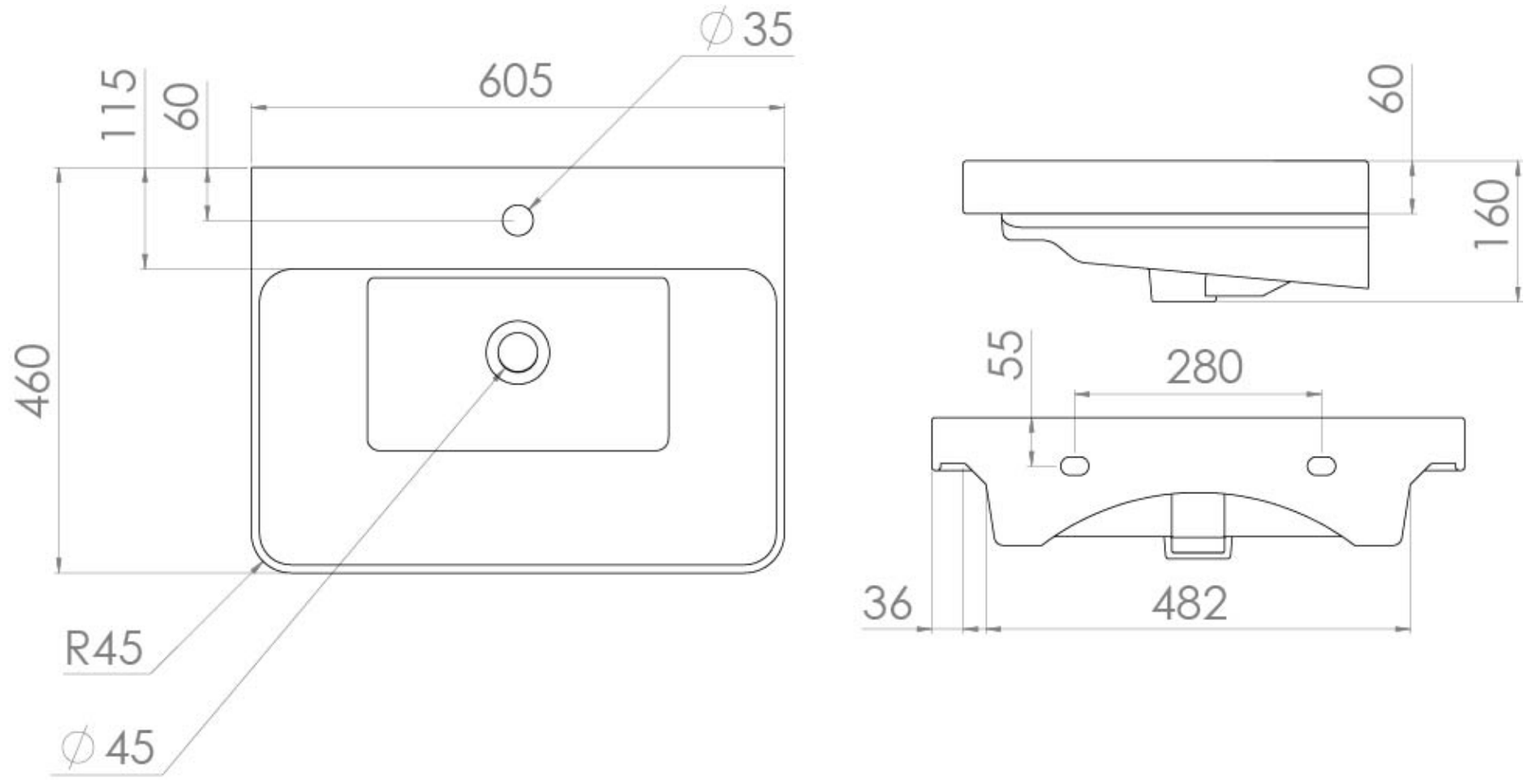


---

Saneux reserves the right to alter the specifications and product range without prior notice. Dimensions are given as a guide only. Dimensions should not be used for surrounding furniture, fixtures and fittings until the product is on site.

https://saneux.com/products/hyde-60x46cm-washbasin-1th