HELIX SQUARE

1700 x 700



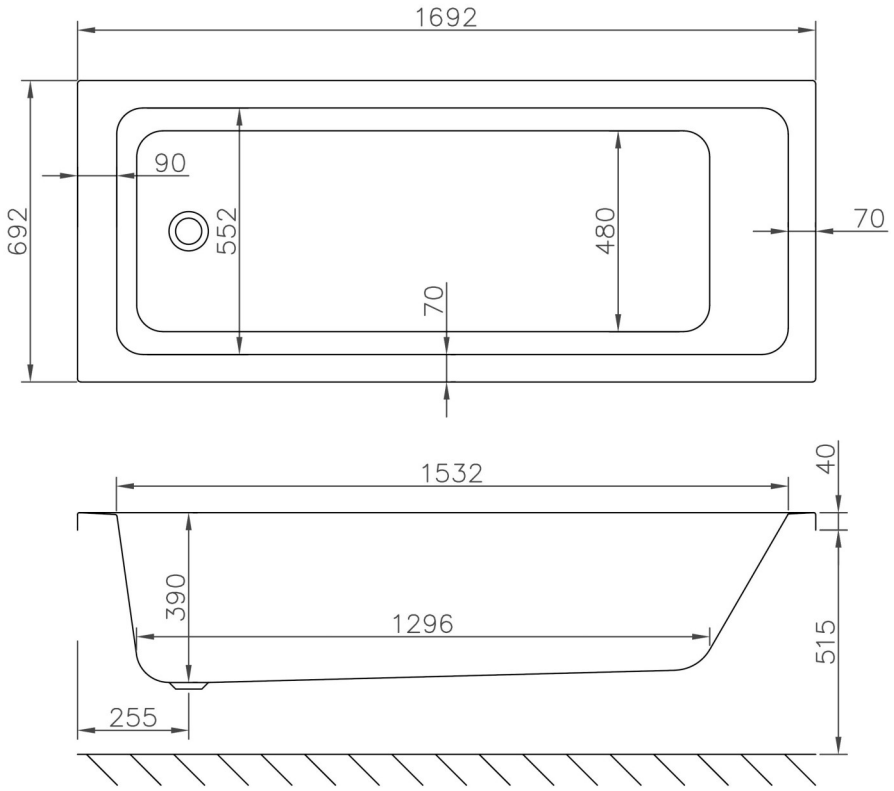



Water Capacity—202 litres