PLASSON®
Flow Solutions

MECHANICAL

1761 Universal Slip Coupler

PLASSON'S innovative solution for connecting or repairing multiple pipe types with one fitting.



14-18mm	19-22mm	24-28mm	31-35mm	40-43mm	48-51mm	60-64mm
0.55"-0.71"	0.74"-0.86"	0.94"-1.1"	1.22"-1.37"	1.57"-1.69"	1.89"-2.00"	2.36"-2.52"

SLIDE N'SEAL





KEY FEATURES

- Suits a variety of plastic and metal pipe materials.
- Each fitting designed to fit a wide range of diameters.
- Zero force pipe insertion – slides freely back and forth.
- Large section 'o'-ring seal – compensates for poor pipe quality.
- Seal compression increases as pressure increases.
- Robust PP body and nut – high impact strength and stress resistance.
- Long sealing area – bridge over damaged section or gap between pipes.
- Total reliability – PN16, designed to last 50 years.
- Suitable for all cold water applications up to 40°.

kiwa approved
UK WATER REGULATION 4





Tel 01444 244446 | sales@plasson.co.uk | www.plasson.co.uk

1761 Universal Slip Coupler

Innovative solution for water supply pipes

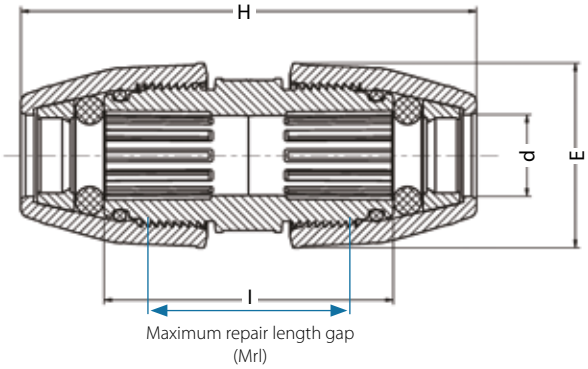

Maximum repair length gap
(Mrl)

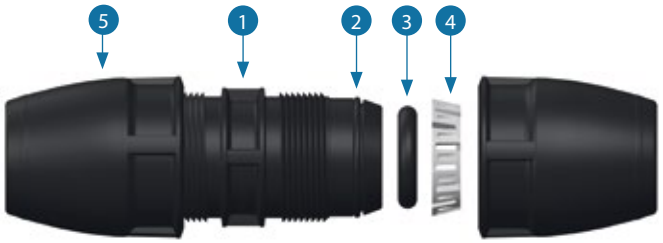

1. Body: PPH.
2. Safety seal: NBR.
3. 'O' ring: NBR.
4. Grip Ring: Acetal & stainless steel.
5. Nut: PPH.

1761 Universal Slip Coupler

Universal x Universal

SLIDE N'SEAL



Code	d (popular pipes)	Mrl (Maximum repair length)	H	I	E
PL176100014018	14-18 (15mm, 3/8")	80	180	119	54
PL176100019022	19-22 (20mm, 1/2")	80	180	119	58
PL176100024028	24-28 (25mm, 3/4")	90	200	133	66
PL176100031035	31-35 (32mm, 1")	100	210	143	76
PL176100040043	40-43 (40mm, 1¼")	110	250	151	89
PL176100048051	48-51 (50mm, 1½")	120	270	158	101
PL176100060064	60-64 (63mm, 2")	130	310	176	120

Fitting Instructions



Mark pipe insertion depth. (approximately half the fitting length).
Undo nuts 1 to 2 turns while ensuring they remain on the fitting.



Insert each pipe to the marking.



Tighten each nut firmly with a Plasson wrench while holding the body with another wrench. The threads should no longer be visible.

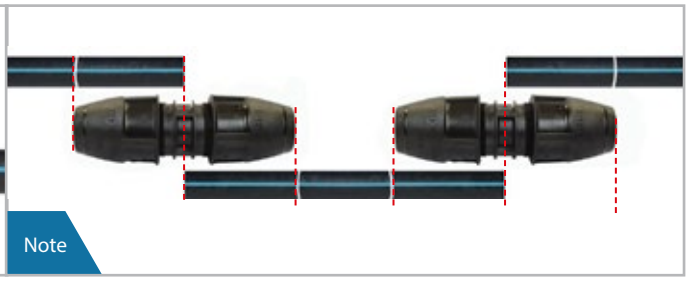

If using to repair a damaged pipe, please note the maximum repair length. If the damaged section is longer than the Mrl, use two fittings as shown.

Note: If the fitting is reused, make sure metal teeth are present in the split ring.

PLASSON®