STETSON 1700X750MM BATH SINGLE ENDED & BATH LEGS



Product Code: 20152

PRODUCT INFORMATION

Finish:	Gloss White
Height:	400mm
Width:	1700mm
Depth:	750mm
Material	Acrylic
Weight	26kg
Waste	Not included, purchase separately
Guarantee	5 years
Overflow Height (Centre (mm))	75mm
Compatible Tap Types	Deck mounted, Wall mounted
Overflow(s)	Yes
Capacity to Overflow (L)	190L

DESCRIPTION

The STETSON collection of built-in baths are characterised by their bold design with square edges and minimalistic form.

This STETSON 1700x750mm single ended bath allows you to lie comfortably in your bath so you can ensure you can have a relaxing bathing experience.

It has sloped sides so you can sink into the bath with comfort, and with it being made of acrylic, it will hold the heat in well so you can enjoy your soak for longer.

It doesn't come with pre-drilled holes so you can choose to have either a wall mounted bath filler, a deck mounted bath filler, or an in-built bath filler, allowing you to truly customise your bath to suit your preferences.

Bath legs are included.

TECHNICAL DRAWING

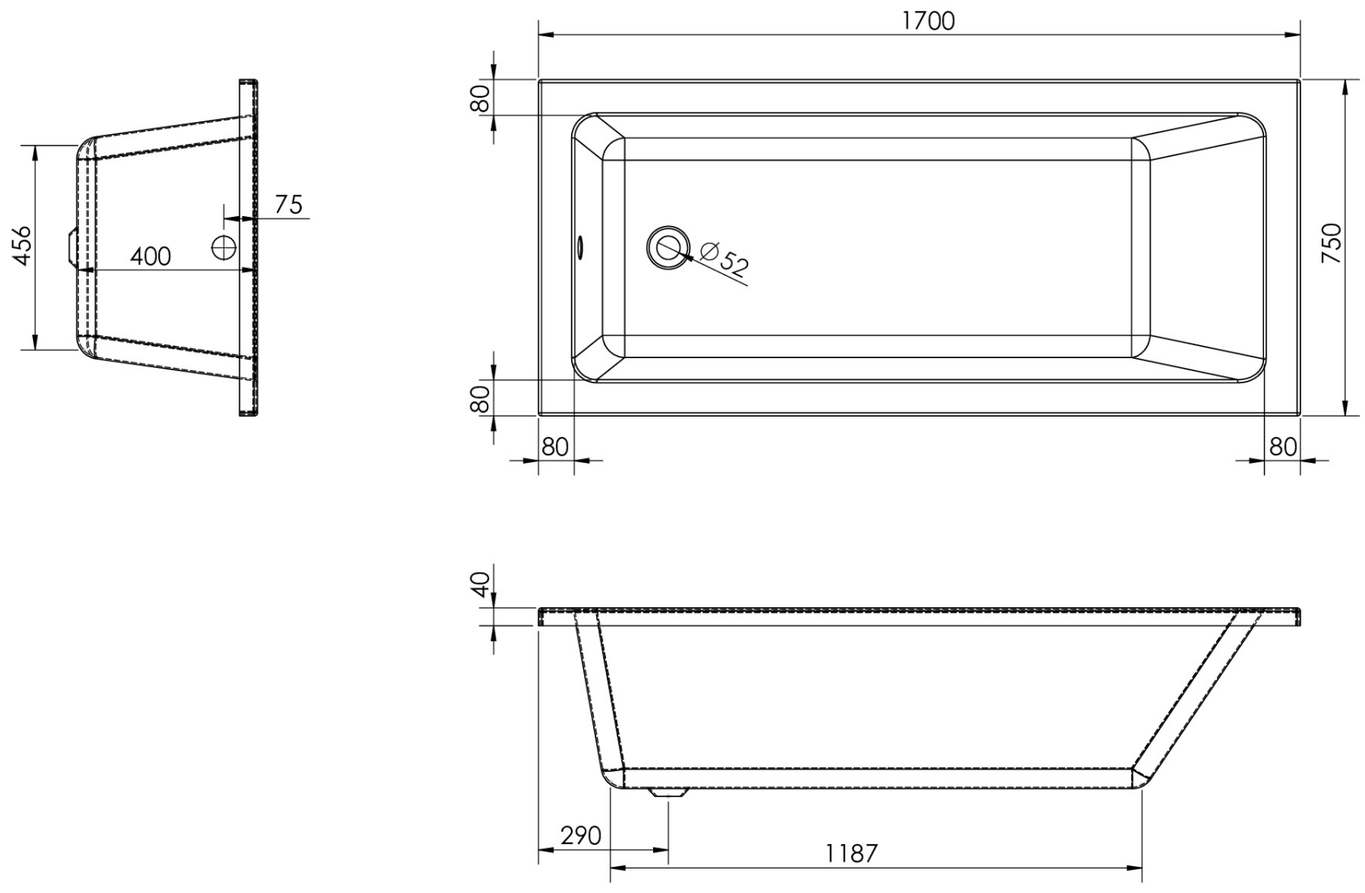

Saneux reserves the right to alter the specifications and product range without prior notice. Dimensions are given as a guide only. Dimensions should not be used for surrounding furniture, fixtures and fittings until the product is on site.

https://saneux.com/products/stetson-1700x750mm-bath-single-ended-bath-legs