FLUSHE 2.0 BRASS FLUSH BUTTON (FOR HC2030) - CHROME

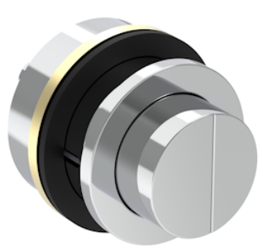

Product Code: HC2030FB

PRODUCT INFORMATION

Finish:	Chrome
Height:	55mm
Width:	55mm
Depth:	81.5mm
Material	Brass
Weight	0.55kg
Guarantee	2 years
Compatible Cistern(s)	HC2030

DESCRIPTION

FLUSHE 2.0 is our collection of framed and concealed cisterns, flush plates, and flush buttons.

We don't want the extras to be overlooked when you're designing your bathroom, which is why there are 5 finish options for flush buttons to go with our HC2030 cistern.

Please note: this flush button works by opening the flush valve when pressed and closing when released. The flush type is mechanical & dual flush.

TECHNICAL DRAWING

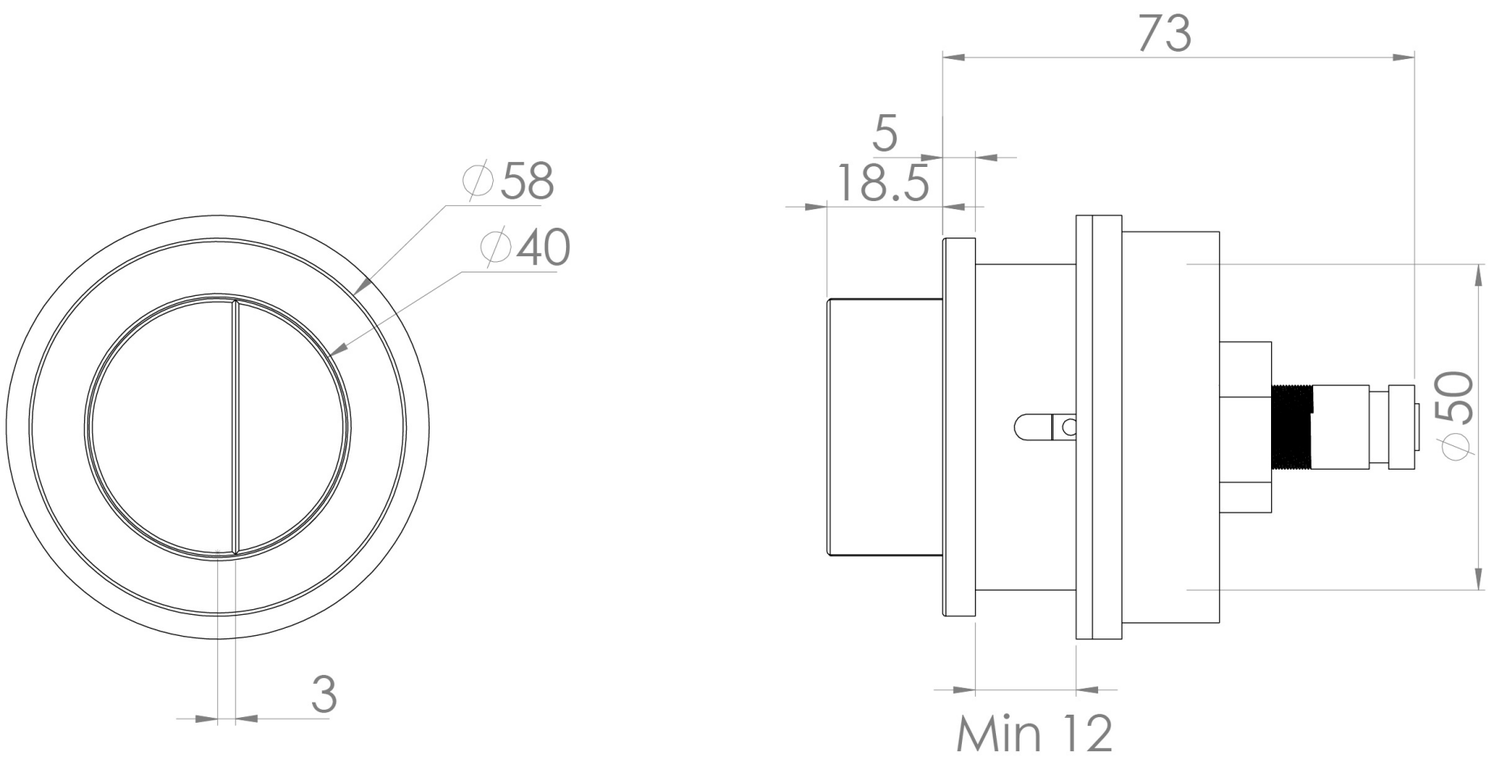

Saneux reserves the right to alter the specifications and product range without prior notice. Dimensions are given as a guide only. Dimensions should not be used for surrounding furniture, fixtures and fittings until the product is on site.