INDIGO 60X45CM WASHBASIN 1TH



Product Code: IND060B

PRODUCT INFORMATION

Finish:	Gloss White
Height:	175mm
Width:	600mm
Depth:	450mm
Material	Ceramic
Weight	16.5kg
Overflow(s)	Yes
Overflow Position	Centre
Overflow Diameter	22mm
Compatible Overflows	OC01, OC02, OC03
Tap Holes	1 Tap Hole
Tap Hole Position	Centre
Extra Tap Hole Options	2 tap holes
Recommended Waste Required	Slotted waste
Furniture Required For Installation?	Optional
Guarantee	Lifetime

DESCRIPTION

The INDIGO range of minimalistic yet practical basins & units can enhance the look and feel of your bathroom through its smooth curves and vast storage space.

The INDIGO 60x45cm 1 tap hole basin has a deep bowl to prevent splashing, plenty of ledge space, and works with the INDIGO 1 & 2 drawer and 2 door units in the same size.

*With an overflow.

TECHNICAL DRAWING

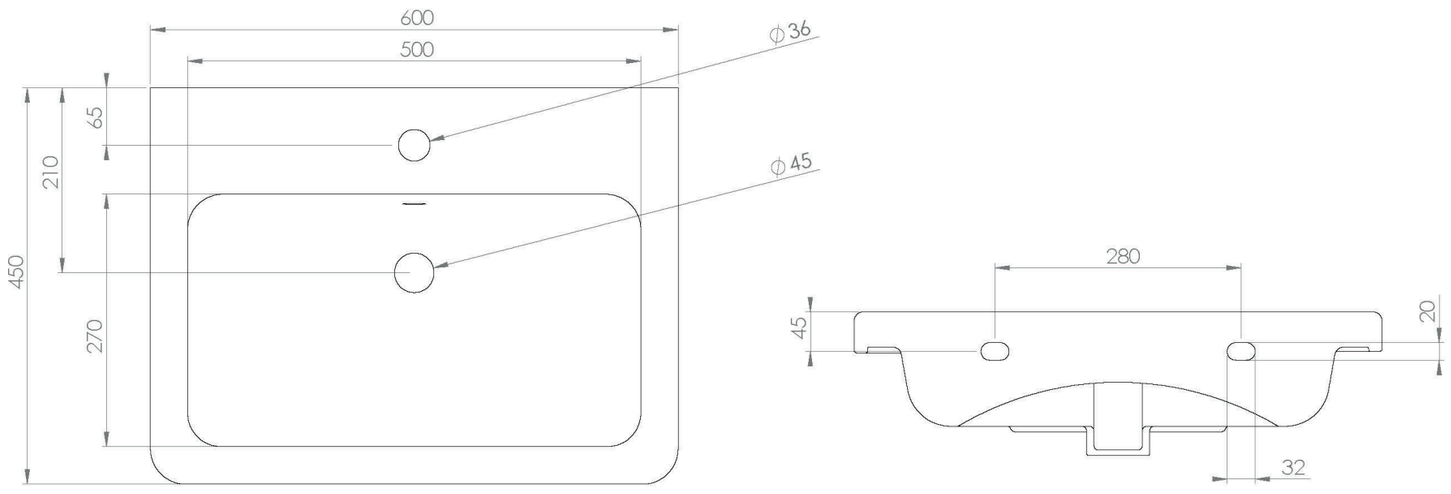

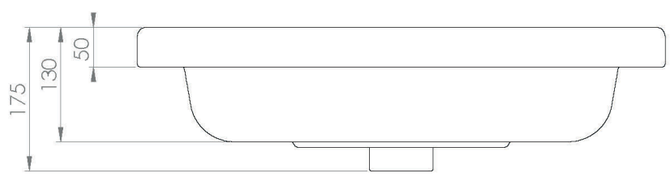

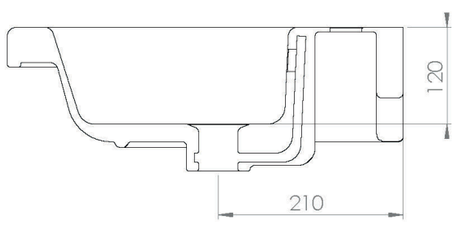

Saneux reserves the right to alter the specifications and product range without prior notice. Dimensions are given as a guide only. Dimensions should not be used for surrounding furniture, fixtures and fittings until the product is on site.

https://saneux.com/products/indigo-60x45cm-washbasin-1th