AIR CLOSE COUPLED WC PAN, CISTERN & SEAT PACK - RIMLESS



Product Code: AIRCC77

PRODUCT INFORMATION

Finish:	Gloss White
Height:	775mm
Width:	390mm
Depth:	637mm
Material	Ceramic, Plastic
Weight	44.7kg
Approvals/Standards	WRAS
Guarantee	Lifetime, 2 years on working parts
Seat Type	Soft close & quick release
Type of Flushing	Rimless technology
Other Features	Pan, cistern & seat in one box
Compatible Cistern(s)	AIR71

DESCRIPTION

AIR is our space-saving collection of sanitaryware and furniture.

The AIRCC77 is the complete package - quite literally - as it includes the AIR rimless pan, cistern with WRAS approved internals, and the slim soft close seat.

The pan's elegant design will work in a variety of bathroom interiors, whilst the rimless flush adds an even more contemporary look to it and is also simple to clean. It pairs with the AIR cistern with WRAS approved cistern internals so you can be sure that the water in the cistern tank will not be contaminated by plastic parts. It also comes with the AIR slim-line soft closing seat - a modern seat that has a quick release function to remove it from the pan, again making cleaning easy.

Component parts included:
AIR77 (Pan)
AIR71 (Cistern)
AIR78 (Seat)

TECHNICAL DRAWING

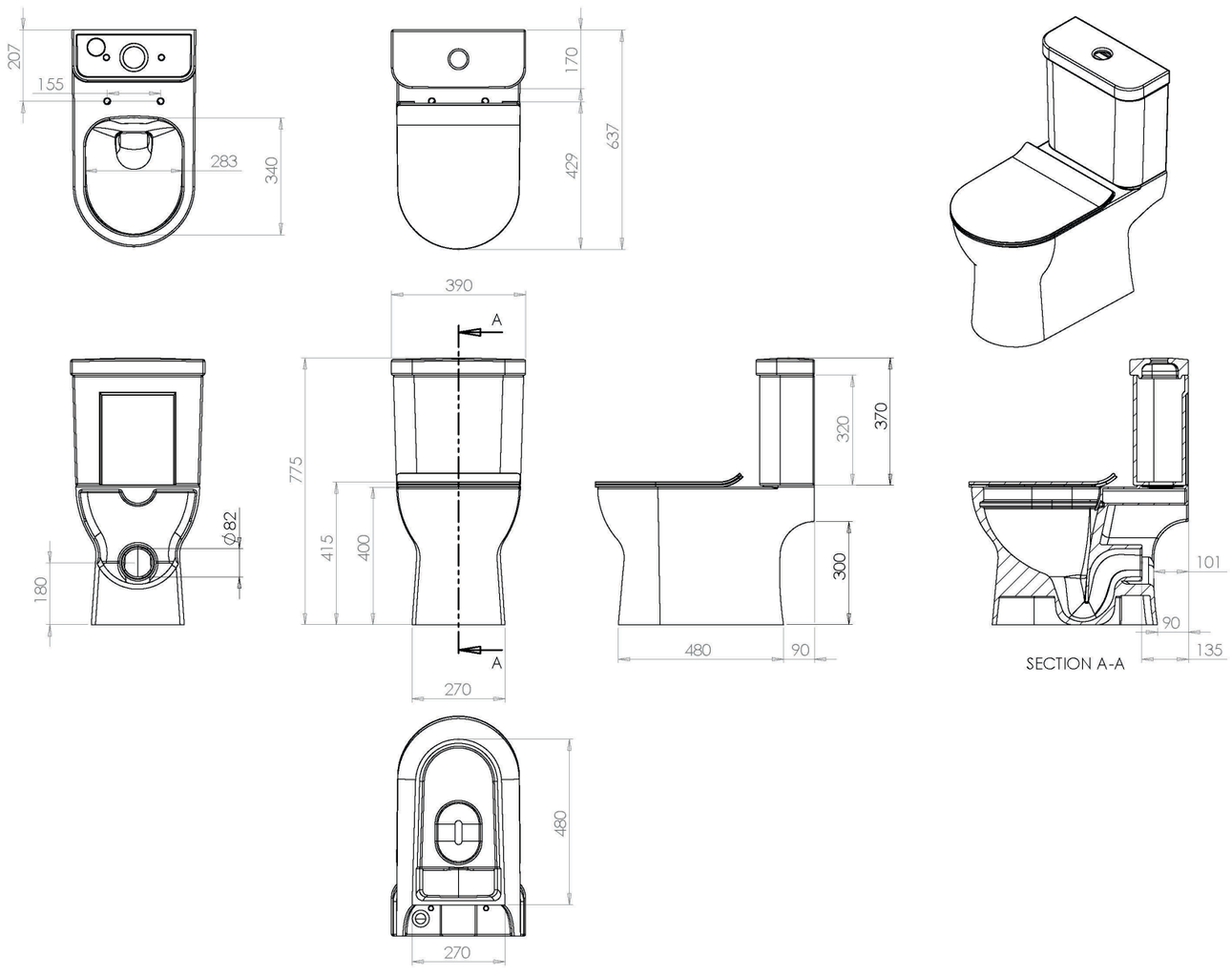

Saneux reserves the right to alter the specifications and product range without prior notice. Dimensions are given as a guide only. Dimensions should not be used for surrounding furniture, fixtures and fittings until the product is on site.

https://saneux.com/products/air-close-coupled-wc-pan-cistern-seat-pack-rimless